Installer reference guide

R32 split series

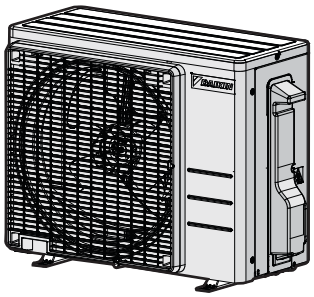

ARXF20J5V1B
ARXF25J5V1B
ARXF35J5V1B
ARXF42J5V1B

Table of contents

1 About the documentation 4
1.1 About this document 4
1.2 Installer reference guide at a glance 5

2 General safety precautions 6
2.1 About the documentation 6
2.1.1 Meaning of warnings and symbols 6
2.2 For the installer 7
2.2.1 General 7
2.2.2 Installation site 8
2.2.3 Refrigerant — in case of R410A or R32 11
2.2.4 Electrical 13

3 Specific installer safety instructions 15

4 About the box 20
4.1 Overview: About the box 20
4.2 Outdoor unit 20
4.2.1 To unpack the outdoor unit 20
4.2.2 To remove the accessories from the outdoor unit 21

5 About the units and options 23
5.1 Overview: About the units and options 23
5.2 Identification 23

6 Unit installation 24
6.1 Preparing the installation site 24
6.1.1 Installation site requirements of the outdoor unit 25
6.1.2 Additional installation site requirements of the outdoor unit in cold climates 27
6.2 Opening the units 28
6.2.1 About opening the units 28
6.2.2 To open the outdoor unit 28
6.3 Mounting the outdoor unit 28
6.3.1 About mounting the outdoor unit 28
6.3.2 Precautions when mounting the outdoor unit 29
6.3.3 To provide the installation structure 29
6.3.4 To install the outdoor unit 30
6.3.5 To provide drainage 30
6.3.6 To prevent the outdoor unit from falling over 31

7 Piping installation 32
7.1 Preparing refrigerant piping 32
7.1.1 Refrigerant piping requirements 32
7.1.2 Refrigerant piping length and height difference 33
7.1.3 Refrigerant piping insulation 33
7.2 Connecting the refrigerant piping 33
7.2.1 About connecting the refrigerant piping 33
7.2.2 Precautions when connecting the refrigerant piping 33
7.2.3 Guidelines when connecting the refrigerant piping 34
7.2.4 Pipe bending guidelines 35
7.2.5 To flare the pipe end 35
7.2.6 Using the stop valve and service port 36
7.2.7 To connect the refrigerant piping to the outdoor unit 37
7.3 Checking the refrigerant piping 38
7.3.1 About checking the refrigerant piping 38
7.3.2 Precautions when checking the refrigerant piping 38
7.3.3 To check for leaks 39
7.3.4 To perform vacuum drying 39
7.4 Charging refrigerant 40
7.4.1 About charging refrigerant 40
7.4.2 About the refrigerant 41
7.4.3 To determine the additional refrigerant amount 41
7.4.4 To determine the complete recharge amount 42
7.4.5 To charge additional refrigerant 42
7.4.6 To fix the fluorinated greenhouse gases label 42

8 Electrical installation 44
- 8.1 Preparing electrical wiring ... 44
  - 8.1.1 About preparing electrical wiring ... 44
- 8.2 Connecting the electrical wiring ... 45
  - 8.2.1 About connecting the electrical wiring ... 45
  - 8.2.2 Precautions when connecting the electrical wiring ... 45
  - 8.2.3 Guidelines when connecting the electrical wiring ... 46
  - 8.2.4 Specifications of standard wiring components ... 47
  - 8.2.5 To connect the electrical wiring to the outdoor unit ... 47

9 Finishing the outdoor unit installation 49
- 9.1 To finish the outdoor unit installation ... 49
- 9.2 To close the outdoor unit ... 49

10 Commissioning 50
- 10.1 Overview: Commissioning ... 50
- 10.2 Precautions when commissioning ... 50
- 10.3 Checklist before commissioning ... 50
- 10.4 Checklist during commissioning ... 51
- 10.5 To perform a test run ... 51
- 10.6 Starting up the outdoor unit ... 52

11 Hand-over to the user 53

12 Maintenance and service 54
- 12.1 Overview: Maintenance and service ... 54
- 12.2 Maintenance safety precautions ... 54
- 12.3 Checklist for yearly maintenance of the outdoor unit ... 54

13 Troubleshooting 55
- 13.1 Overview: Troubleshooting ... 55
- 13.2 Precautions when troubleshooting ... 55
- 13.3 Solving problems based on symptoms ... 55
  - 13.3.1 Symptom: Indoor units fall, vibrate or make noise ... 55
  - 13.3.2 Symptom: The unit is NOT heating or cooling as expected ... 55
  - 13.3.3 Symptom: Water leakage ... 56
  - 13.3.4 Symptom: Electrical leakage ... 56
  - 13.3.5 Symptom: Unit does NOT function or burn damage ... 56

14 Disposal 57
- 14.1 Overview: Disposal ... 57
- 14.2 To pump down ... 57
- 14.3 To start and stop forced cooling ... 58
  - 14.3.1 To start and stop forced cooling using the indoor unit ON/OFF switch ... 58
  - 14.3.2 To start and stop forced cooling using the indoor unit user interface ... 58

15 Technical data 59
- 15.1 Wiring diagram ... 60

16 Glossary 61

1 About the documentation

1.1 About this document

WARNING

Make sure installation, servicing, maintenance, repair and applied materials follow the instructions from Daikin (including all documents listed in “Documentation set”) and, in addition, comply with applicable legislation and are performed by qualified persons only. In Europe and areas where IEC standards apply, EN/IEC 60335-2-40 is the applicable standard.

INFORMATION

Make sure that the user has the printed documentation and ask him/her to keep it for future reference.

Target audience

Authorised installers

INFORMATION

This appliance is intended to be used by expert or trained users in shops, in light industry, and on farms, or for commercial and household use by lay persons.

INFORMATION

This document only describes installation instructions specific to the outdoor unit. For installation of the indoor unit (mounting the indoor unit, connecting the refrigerant piping to the indoor unit, connecting the electrical wiring to the indoor unit ...), see the installation manual of the indoor unit.

Documentation set

This document is part of a documentation set. The complete set consists of:

- **General safety precautions:**
  - Safety instructions that you MUST read before installing
  - Format: Paper (in the box of the outdoor unit)
- **Outdoor unit installation manual:**
  - Installation instructions
  - Format: Paper (in the box of the outdoor unit)
- **Installer reference guide:**
  - Preparation of the installation, reference data, ...
  - Format: Digital files on https://www.daikin.eu. Use the search function to find your model.

The latest revision of the supplied documentation is published on the regional Daikin website and is available via your dealer.

Scan the QR code below to find the full documentation set and more information about your product on the Daikin website.

ARXF-J

The original instructions are written in English. All other languages are translations of the original instructions.

Technical engineering data

- A **subset** of the latest technical data is available on the regional Daikin website (publicly accessible).
- The **full set** of the latest technical data is available on the Daikin Business Portal (authentication required).

1.2 Installer reference guide at a glance

Chapter	Description
General safety precautions	Safety instructions that you MUST read before installing
About the documentation	What documentation exists for the installer
About the box	How to unpack the units and remove their accessories
About the unit	▪ System layout ▪ Operation range
Preparation	What to do and know before going on-site
Installation	What to do and know to install the system
Configuration	What to do and know to configure the system after it is installed
Commissioning	What to do and know to commission the system after it is configured
Hand-over to the user	What to give and explain to the user
Disposal	How to dispose of the system
Technical data	Specifications of the system
Glossary	Definition of terms

2 General safety precautions

2.1 About the documentation

- The original instructions are written in English. All other languages are translations of the original.
- The precautions described in this document cover very important topics, follow them carefully.
- The installation of the system, and all activities described in the installation manual and in the installer reference guide MUST be performed by an authorised installer.

2.1.1 Meaning of warnings and symbols



DANGER

Indicates a situation that results in death or serious injury.



DANGER: RISK OF ELECTROCUTION

Indicates a situation that could result in electrocution.



DANGER: RISK OF BURNING/SCALDING

Indicates a situation that could result in burning/scalding because of extreme hot or cold temperatures.



DANGER: RISK OF EXPLOSION

Indicates a situation that could result in explosion.



WARNING

Indicates a situation that could result in death or serious injury.



WARNING: FLAMMABLE MATERIAL



WARNING: MILDLY FLAMMABLE MATERIAL

The refrigerant inside this unit is mildly flammable.



CAUTION

Indicates a situation that could result in minor or moderate injury.



NOTICE

Indicates a situation that could result in equipment or property damage.



INFORMATION

Indicates useful tips or additional information.

Symbols used on the unit:

Symbol	Explanation
	Before installation, read the installation and operation manual, and the wiring instruction sheet.
	Before performing maintenance and service tasks, read the service manual.
	For more information, see the installer and user reference guide.
	The unit contains rotating parts. Be careful when servicing or inspecting the unit.

Symbols used in the documentation:

Symbol	Explanation
	Indicates a figure title or a reference to it. **Example:** "1–3 Figure title" means "Figure 3 in chapter 1".
	Indicates a table title or a reference to it. **Example:** "1–3 Table title" means "Table 3 in chapter 1".

2.2 For the installer

2.2.1 General

If you are NOT sure how to install or operate the unit, contact your dealer.



DANGER: RISK OF BURNING/SCALDING

- Do NOT touch the refrigerant piping, water piping or internal parts during and immediately after operation. It could be too hot or too cold. Give it time to return to normal temperature. If you MUST touch it, wear protective gloves.
- Do NOT touch any accidental leaking refrigerant.



WARNING

Improper installation or attachment of equipment or accessories could result in electrical shock, short-circuit, leaks, fire or other damage to the equipment. ONLY use accessories, optional equipment and spare parts made or approved by Daikin unless otherwise specified.



WARNING

Make sure installation, testing and applied materials comply with applicable legislation (on top of the instructions described in the Daikin documentation).



WARNING

Tear apart and throw away plastic packaging bags so that nobody, especially children, can play with them. **Possible consequence:** suffocation.



WARNING

Provide adequate measures to prevent that the unit can be used as a shelter by small animals. Small animals that make contact with electrical parts can cause malfunctions, smoke or fire.

CAUTION

Wear adequate personal protective equipment (protective gloves, safety glasses,...) when installing, maintaining or servicing the system.

CAUTION

Do NOT touch the air inlet or aluminium fins of the unit.

CAUTION

- Do NOT place any objects or equipment on top of the unit.
- Do NOT sit, climb or stand on the unit.

NOTICE

Works executed on the outdoor unit are best done under dry weather conditions to avoid water ingress.

In accordance with the applicable legislation, it might be necessary to provide a logbook with the product containing at least: information on maintenance, repair work, results of tests, stand-by periods,...

Also, at least, following information MUST be provided at an accessible place at the product:

- Instructions for shutting down the system in case of an emergency
- Name and address of fire department, police and hospital
- Name, address and day and night telephone numbers for obtaining service

In Europe, EN378 provides the necessary guidance for this logbook.

2.2.2 Installation site

- Provide sufficient space around the unit for servicing and air circulation.
- Make sure the installation site withstands the weight and vibration of the unit.
- Make sure the area is well ventilated. Do NOT block any ventilation openings.
- Make sure the unit is level.

Do NOT install the unit in the following places:

- In potentially explosive atmospheres.
- In places where there is machinery that emits electromagnetic waves. Electromagnetic waves may disturb the control system, and cause malfunction of the equipment.
- In places where there is a risk of fire due to the leakage of flammable gases (example: thinner or gasoline), carbon fibre, ignitable dust.
- In places where corrosive gas (example: sulphurous acid gas) is produced. Corrosion of copper pipes or soldered parts may cause the refrigerant to leak.

Instructions for equipment using R32 refrigerant

A2L

WARNING: MILDLY FLAMMABLE MATERIAL

The refrigerant inside this unit is mildly flammable.

WARNING

- Do NOT pierce or burn refrigerant cycle parts.
- Do NOT use cleaning materials or means to accelerate the defrosting process other than those recommended by the manufacturer.
- Be aware that the refrigerant inside the system is odourless.

WARNING

The appliance shall be stored so as to prevent mechanical damage and in a well-ventilated room without continuously operating ignition sources (example: open flames, an operating gas appliance or an operating electric heater) and have a room size as specified below.

WARNING

Make sure installation, servicing, maintenance and repair comply with instructions from Daikin and with applicable legislation (for example national gas regulation) and are executed ONLY by authorised persons.

WARNING

- Take precautions to avoid excessive vibration or pulsation to refrigeration piping.
- Protect the protection devices, piping and fittings as much as possible against adverse environmental effects.
- Provide space for expansion and contraction of long runs of piping.
- Design and install piping in refrigerating systems such as to minimise the likelihood of hydraulic shock damaging the system.
- Mount the indoor equipment and pipes securely and protect them to avoid accidental rupture of equipment or pipes in case of events such as moving furniture or reconstruction activities.

WARNING

If one or more rooms are connected to the unit using a duct system, make sure:

- there are no operating ignition sources (example: open flames, an operating gas appliance or an operating electric heater) in case the floor area is less than the minimum floor area A (m^2).
- no auxiliary devices, which may be a potential ignition source, are installed in the duct work (example: hot surfaces with a temperature exceeding 700°C and electric switching device);
- only auxiliary devices approved by the manufacturer are used in the duct work;
- air inlet AND outlet are connected directly to the same room by ducting. Do NOT use spaces such as a false ceiling as a duct for the air inlet or outlet.

CAUTION

Do NOT use potential sources of ignition in searching for or detection of refrigerant leaks.

NOTICE

- Do NOT re-use joints and copper gaskets which have been used already.
- Joints made in the installation between parts of the refrigerant system shall be accessible for maintenance purposes.

Installation space requirements

WARNING

If appliances contain R32 refrigerant, the floor area of the room in which the appliances are installed, operated and stored MUST be larger than the minimum floor area defined in table below A (m^2). This applies to:

- Indoor units **without** a refrigerant leakage sensor; in case of indoor units **with** refrigerant leakage sensor, consult the installation manual
- Outdoor units installed or stored indoors (e.g. winter garden, garage, machinery room)

NOTICE

- The pipework shall be securely mounted and guarded protected from physical damage.
- Keep the pipework installation to a minimum.

To determine the minimum floor area

1 Determine the total refrigerant charge in the system (= factory refrigerant charge ❶ + ❷ additional refrigerant amount charged).

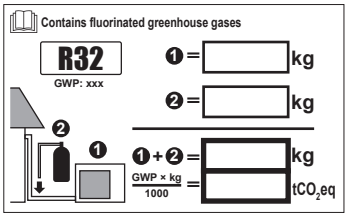

2 Determine which graph or table to use.

- For indoor units: Is the unit ceiling-mounted, wall-mounted or floor-standing?
- For outdoor units installed or stored indoors, this depends on the installation height:

If the installation height is…	Then use the graph or table for…
<1.8 m	Floor-standing units
1.8≤x<2.2 m	Wall-mounted units
≥2.2 m	Ceiling-mounted units

3 Use the graph or table to determine the minimum floor area.

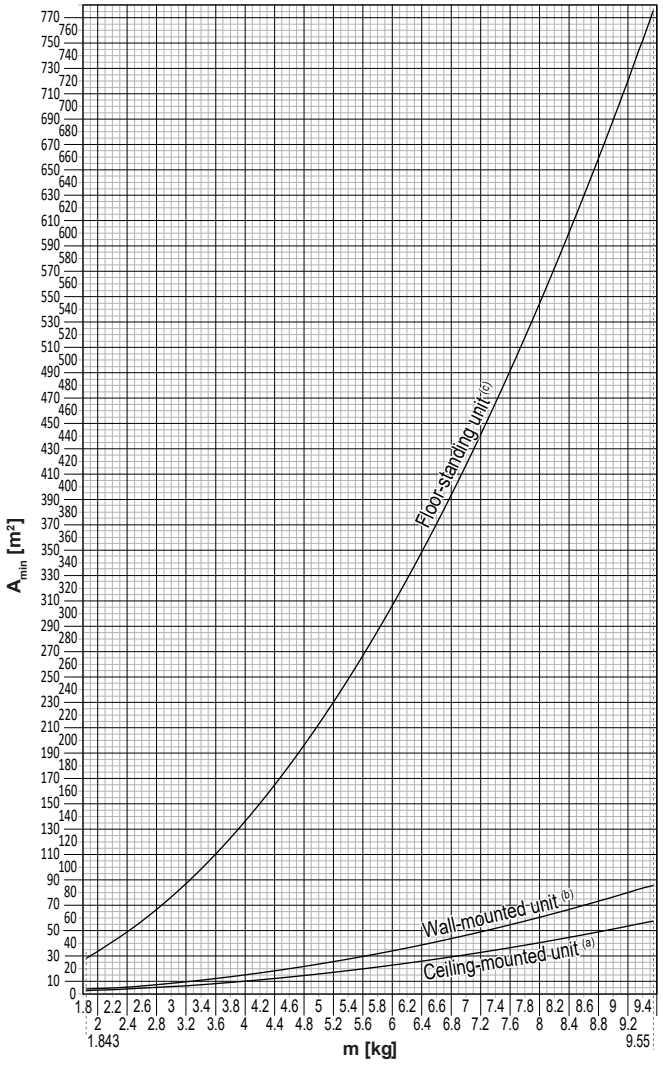

Ceiling-mounted unit[a]		Wall-mounted unit[b]		Floor-standing unit[c]	
m (kg)	A_{min} (m²)	m (kg)	A_{min} (m²)	m (kg)	A_{min} (m²)
≤1.842	—	≤1.842	—	≤1.842	—
1.843	3.64	1.843	4.45	1.843	28.9
2.0	3.95	2.0	4.83	2.0	34.0
2.2	4.34	2.2	5.31	2.2	41.2
2.4	4.74	2.4	5.79	2.4	49.0
2.6	5.13	2.6	6.39	2.6	57.5
2.8	5.53	2.8	7.41	2.8	66.7
3.0	5.92	3.0	8.51	3.0	76.6
3.2	6.48	3.2	9.68	3.2	87.2
3.4	7.32	3.4	10.9	3.4	98.4
3.6	8.20	3.6	12.3	3.6	110
3.8	9.14	3.8	13.7	3.8	123
4.0	10.1	4.0	15.1	4.0	136
4.2	11.2	4.2	16.7	4.2	150
4.4	12.3	4.4	18.3	4.4	165
4.6	13.4	4.6	20.0	4.6	180
4.8	14.6	4.8	21.8	4.8	196
5.0	15.8	5.0	23.6	5.0	213
5.2	17.1	5.2	25.6	5.2	230
5.4	18.5	5.4	27.6	5.4	248
5.6	19.9	5.6	29.7	5.6	267
5.8	21.3	5.8	31.8	5.8	286
6.0	22.8	6.0	34.0	6.0	306
6.2	24.3	6.2	36.4	6.2	327
6.4	25.9	6.4	38.7	6.4	349
6.6	27.6	6.6	41.2	6.6	371
6.8	29.3	6.8	43.7	6.8	394
7.0	31.0	7.0	46.3	7.0	417
7.2	32.8	7.2	49.0	7.2	441
7.4	34.7	7.4	51.8	7.4	466
7.6	36.6	7.6	54.6	7.6	492
7.8	38.5	7.8	57.5	7.8	518
8	40.5	8	60.5	8	545
8.2	42.6	8.2	63.6	8.2	572
8.4	44.7	8.4	66.7	8.4	601
8.6	46.8	8.6	69.9	8.6	629
8.8	49.0	8.8	73.2	8.8	659
9	51.3	9	76.6	9	689
9.2	53.6	9.2	80.0	9.2	720
9.4	55.9	9.4	83.6	9.4	752
9.55	57.7	9.55	86.2	9.55	776

m Total refrigerant charge in the system
A_{min} Minimum floor area
(a) Ceiling-mounted unit (= Ceiling-mounted unit)
(b) Wall-mounted unit (= Wall-mounted unit)
(c) Floor-standing unit (= Floor-standing unit)

2.2.3 Refrigerant — in case of R410A or R32

If applicable. See the installation manual or installer reference guide of your application for more information.

DANGER: RISK OF EXPLOSION

Pump down – Refrigerant leakage. If you want to pump down the system, and there is a leak in the refrigerant circuit:

- Do NOT use the unit's automatic pump down function, with which you can collect all refrigerant from the system into the outdoor unit. **Possible consequence:** Self-combustion and explosion of the compressor because of air going into the operating compressor.
- Use a separate recovery system so that the unit's compressor does NOT have to operate.

WARNING

During tests, NEVER pressurise the product with a pressure higher than the maximum allowable pressure (as indicated on the nameplate of the unit).

WARNING

Take sufficient precautions in case of refrigerant leakage. If refrigerant gas leaks, ventilate the area immediately. Possible risks:

- Excessive refrigerant concentrations in a closed room can lead to oxygen deficiency.
- Toxic gas might be produced if refrigerant gas comes into contact with fire.

WARNING

ALWAYS recover the refrigerant. Do NOT release directly into the environment. Use a vacuum pump to evacuate the installation.

WARNING

Make sure there is no oxygen in the system. Refrigerant may ONLY be charged after performing the leak test and the vacuum drying.

Possible consequence: Self-combustion and explosion of the compressor because of oxygen going into the operating compressor.

NOTICE

- To avoid compressor breakdown, do NOT charge more than the specified amount of refrigerant.
- When the refrigerant system is to be opened, refrigerant MUST be treated according to the applicable legislation.

NOTICE

Make sure refrigerant piping installation complies with applicable legislation. In Europe, EN378 is the applicable standard.

NOTICE

Make sure the field piping and connections are NOT subjected to stress.

NOTICE

After all the piping has been connected, make sure there is no gas leak. Use nitrogen to perform a gas leak detection.

- In case recharge is required, see the nameplate or the refrigerant charge label of the unit. It states the type of refrigerant and necessary amount.
- Whether the unit is factory charged with refrigerant or non-charged, in both cases you might need to charge additional refrigerant, depending on the pipe sizes and pipe lengths of the system.
- ONLY use tools exclusively for the refrigerant type used in the system, this to ensure pressure resistance and prevent foreign materials from entering into the system.
- Charge the liquid refrigerant as follows:

If	Then
A siphon tube is present (i.e., the cylinder is marked with "Liquid filling siphon attached")	Charge with the cylinder upright. 

If	Then
A siphon tube is NOT present	Charge with the cylinder upside down. 

- Open refrigerant cylinders slowly.
- Charge the refrigerant in liquid form. Adding it in gas form may prevent normal operation.

CAUTION

When the refrigerant charging procedure is done or when pausing, close the valve of the refrigerant tank immediately. If the valve is NOT closed immediately, remaining pressure might charge additional refrigerant. **Possible consequence:** Incorrect refrigerant amount.

2.2.4 Electrical

DANGER: RISK OF ELECTROCUTION

- Turn OFF all power supply before removing the switch box cover, connecting electrical wiring or touching electrical parts.
- Disconnect the power supply for more than 10 minutes, and measure the voltage at the terminals of main circuit capacitors or electrical components before servicing. The voltage MUST be less than 50 V DC before you can touch electrical components. For the location of the terminals, see the wiring diagram.
- Do NOT touch electrical components with wet hands.
- Do NOT leave the unit unattended when the service cover is removed.

WARNING

If NOT factory installed, a main switch or other means for disconnection, having a contact separation in all poles providing full disconnection under overvoltage category III condition, MUST be installed in the fixed wiring.

WARNING

- ONLY use copper wires.
- Make sure the field wiring complies with the national wiring regulations.
- All field wiring MUST be performed in accordance with the wiring diagram supplied with the product.
- NEVER squeeze bundled cables and make sure they do NOT come in contact with the piping and sharp edges. Make sure no external pressure is applied to the terminal connections.
- Make sure to install earth wiring. Do NOT earth the unit to a utility pipe, surge absorber, or telephone earth. Incomplete or incorrect earthing may cause electrical shock.
- Make sure to use a dedicated power circuit. NEVER use a power supply shared by another appliance.
- Make sure to install the required fuses or circuit breakers.
- Make sure to install an earth leakage protector. Failure to do so may cause electrical shock or fire.
- When installing the earth leakage protector, make sure it is compatible with the inverter (resistant to high frequency electric noise) to avoid unnecessary opening of the earth leakage protector.

CAUTION

- When connecting the power supply: connect the earth cable first, before making the current-carrying connections.
- When disconnecting the power supply: disconnect the current-carrying cables first, before separating the earth connection.
- The length of the conductors between the power supply stress relief and the terminal block itself MUST be as such that the current-carrying wires are tautened before the earth wire is in case the power supply is pulled loose from the stress relief.

NOTICE

Precautions when laying power wiring:



- Do NOT connect wiring of different thicknesses to the power terminal block (slack in the power wiring may cause abnormal heat).
- When connecting wiring which is the same thickness, do as shown in the figure above.
- For wiring, use the designated power wire and connect firmly, then secure to prevent outside pressure being exerted on the terminal board.
- Use an appropriate screwdriver for tightening the terminal screws. A screwdriver with a small head will damage the head and make proper tightening impossible.
- Over-tightening the terminal screws may break them.

WARNING

- After finishing the electrical work, confirm that each electrical component and terminal inside the switch box is connected securely.
- Make sure all covers are closed before starting up the unit.

NOTICE

ONLY applicable if the power supply is three-phase, and the compressor has an ON/OFF starting method.

If there exists the possibility of reversed phase after a momentary black out and the power goes ON and OFF while the product is operating, attach a reversed phase protection circuit locally. Running the product in reversed phase can break the compressor and other parts.

3 Specific installer safety instructions

Always observe the following safety instructions and regulations.

Unit installation (see "6 Unit installation" [▸ 24])

WARNING

Installation shall be done by an installer, the choice of materials and installation shall comply with the applicable legislation. In Europe, EN378 is the applicable standard.

Installation site (see "6.1 Preparing the installation site" [▸ 24])

CAUTION

- Check if the installation location can support the unit's weight. Poor installation is hazardous. It can also cause vibrations or unusual operating noise.
- Provide sufficient service space.
- Do NOT install the unit so that it is in contact with a ceiling or a wall, as this may cause vibrations.

WARNING

The appliance shall be stored so as to prevent mechanical damage and in a well-ventilated room without continuously operating ignition sources (e.g. open flames, an operating gas appliance, or an operating electric heater). The room size shall be as specified in the General safety precaution.

Connecting the refrigerant piping (see "7.2 Connecting the refrigerant piping" [▸ 33])

CAUTION

Piping and joints of a split system shall be made with permanent joints when inside an occupied space except joints directly connecting the piping to the indoor units.

CAUTION

- No brazing or welding on site for units with R32 refrigerant charge during shipment.
- During installation of the refrigeration system, joining of parts with at least one part charged shall be performed taking into account the following requirements: inside occupied spaces non-permanent joints are NOT allowed for R32 refrigerant except for site made joints directly connecting the indoor unit to piping. Site made joints directly connecting piping to indoor units shall be of non-permanent type.

NOTICE

- Use the flare nut fixed to the unit.
- To prevent gas leakage, apply refrigeration oil ONLY to the inside of the flare. Use refrigeration oil for R32 (FW68DA).
- Do NOT reuse joints.

NOTICE

- Do NOT use mineral oil on flared part.
- Do NOT reuse piping from previous installations.
- NEVER install a drier to this R32 unit to guarantee its lifetime. The drying material may dissolve and damage the system.

WARNING

Connect the refrigerant piping securely before running the compressor. If the refrigerant piping is NOT connected and the stop valve is open when the compressor is run, air will be sucked in. This will cause abnormal pressure in the refrigeration cycle, which may result in equipment damage and even injury.

CAUTION

- Incomplete flaring may cause refrigerant gas leakage.
- Do NOT re-use flares. Use new flares to prevent refrigerant gas leakage.
- Use flare nuts that are included with the unit. Using different flare nuts may cause refrigerant gas leakage.

CAUTION

Do NOT open the valves before flaring is complete. This would cause refrigerant gas leakage.

DANGER: RISK OF EXPLOSION

Do NOT open the stop valves before the vacuum drying is finished.

Charging refrigerant (see "7.4 Charging refrigerant" [▸ 40])

WARNING

- The refrigerant inside the unit is mildly flammable, but normally does NOT leak. If the refrigerant leaks in the room and comes in contact with fire from a burner, a heater, or a cooker, this may result in fire, or the formation of a harmful gas.
- Turn OFF any combustible heating devices, ventilate the room, and contact the dealer where you purchased the unit.
- Do NOT use the unit until a service person confirms that the part from which the refrigerant leaked has been repaired.

WARNING

- Only use R32 as refrigerant. Other substances may cause explosions and accidents.
- R32 contains fluorinated greenhouse gases. Its global warming potential (GWP) value is 675. Do NOT vent these gases into the atmosphere.
- When charging refrigerant, ALWAYS use protective gloves and safety glasses.

NOTICE

To avoid compressor breakdown, do NOT charge more than the specified amount of refrigerant.

WARNING

NEVER directly touch any accidental leaking refrigerant. This could result in severe wounds caused by frostbite.

Electrical installation (see "8 Electrical installation" [▸ 44])

WARNING

The appliance MUST be installed in accordance with national wiring regulations.

WARNING

- All wiring MUST be performed by an authorised electrician and MUST comply with the national wiring regulation.
- Make electrical connections to the fixed wiring.
- All components procured on-site and all electrical construction MUST comply with the applicable legislation.

WARNING

- If the power supply has a missing or wrong N-phase, equipment might break down.
- Establish proper earthing. Do NOT earth the unit to a utility pipe, surge absorber, or telephone earth. Incomplete or incorrect earthing may cause electrical shocks.
- Install the required fuses or circuit breakers.
- Secure the electrical wiring with cable ties so that the cables do NOT come in contact with sharp edges or piping, particularly on the high-pressure side.
- Do NOT use taped wires, extension cords, or connections from a star system. They can cause overheating, electrical shocks or fire.
- Do NOT install a phase advancing capacitor, because this unit is equipped with an inverter. A phase advancing capacitor will reduce performance and may cause accidents.

WARNING

ALWAYS use multicore cable for power supply cables.

WARNING

Use an all-pole disconnection type breaker with at least 3 mm between the contact point gaps that provides full disconnection under overvoltage category III.

WARNING

If the supply cord is damaged, it MUST be replaced by the manufacturer, its service agent or similarly qualified persons in order to avoid a hazard.

WARNING

Do NOT connect the power supply to the indoor unit. This could result in electrical shock or fire.

WARNING

- Do NOT use locally purchased electrical parts inside the product.
- Do NOT branch the power supply for the drain pump, etc. from the terminal block. This could result in electrical shock or fire.

WARNING

Keep the interconnection wiring away from copper pipes without thermal insulation as such pipes will be very hot.

DANGER: RISK OF ELECTROCUTION

All electrical parts (including thermistors) are powered by the power supply. Do NOT touch them with bare hands.



DANGER: RISK OF ELECTROCUTION

Disconnect the power supply for more than 10 minutes, and measure the voltage at the terminals of main circuit capacitors or electrical components before servicing. The voltage MUST be less than 50 V DC before you can touch electrical components. For the location of the terminals, see the wiring diagram.

Finishing indoor unit installation (see "9 Finishing the outdoor unit installation" [▸ 49])



DANGER: RISK OF ELECTROCUTION

- Make sure that the system is earthed properly.
- Turn OFF the power supply before servicing.
- Install the switch box cover before turning ON the power supply.

Commissioning (see "10 Commissioning" [▸ 50])



DANGER: RISK OF ELECTROCUTION



DANGER: RISK OF BURNING/SCALDING



CAUTION

Do NOT perform the test operation while working on the indoor unit(s).

When performing the test operation, NOT ONLY the outdoor unit, but the connected indoor unit will operate as well. Working on an indoor unit while performing a test operation is dangerous.



CAUTION

Do NOT insert fingers, rods or other objects into the air inlet or outlet. Do NOT remove the fan guard. When the fan is rotating at high speed, it will cause injury.

Troubleshooting (see "13 Troubleshooting" [▸ 55])



DANGER: RISK OF ELECTROCUTION



DANGER: RISK OF BURNING/SCALDING



WARNING

- When carrying out an inspection on the switch box of the unit, ALWAYS make sure that the unit is disconnected from the mains. Turn off the respective circuit breaker.
- When a safety device was activated, stop the unit and find out why the safety device was activated before resetting it. NEVER shunt safety devices or change their values to a value other than the factory default setting. If you are unable to find the cause of the problem, call your dealer.



WARNING

Prevent hazards due to inadvertent resetting of the thermal cut-out: power to this appliance MUST NOT be supplied through an external switching device, such as a timer, or connected to a circuit that is regularly turned ON and OFF by the utility.



DANGER: RISK OF ELECTROCUTION

- When the unit is NOT operating, the LEDs on the PCB are turned OFF in order to save power.
- Even when the LEDs are OFF, the terminal block and the PCB may be powered.



WARNING: MILDLY FLAMMABLE MATERIAL

The refrigerant inside this unit is mildly flammable.

4 About the box

Keep the following in mind:

- At delivery, the unit MUST be checked for damage and completeness. Any damage or missing parts MUST be reported immediately to the claims agent of the carrier.
- Bring the packed unit as close as possible to its final installation position to prevent damage during transport.
- Prepare in advance the path along which you want to bring the unit to its final installation position.
- When handling the unit, take into account the following:

   Fragile, handle the unit with care.

   Keep the unit upright in order to avoid damage.

4.1 Overview: About the box

This chapter describes what you have to do after the box with the outdoor unit is delivered on-site.

Keep the following in mind:

- At delivery, the unit MUST be checked for damage and completeness. Any damage or missing parts MUST be reported immediately to the claims agent of the carrier.
- Bring the packed unit as close as possible to its final installation position to prevent damage during transport.
- Prepare in advance the path along which you want to bring the unit to its final installation position.
- When handling the unit, take into account the following:

   Fragile, handle the unit with care.

   Keep the unit upright in order to avoid damage.

4.2 Outdoor unit

4.2.1 To unpack the outdoor unit



WARNING

Make sure installation, servicing, maintenance and repair comply with instructions from Daikin and with applicable legislation (for example national gas regulation) and are executed ONLY by authorised persons.

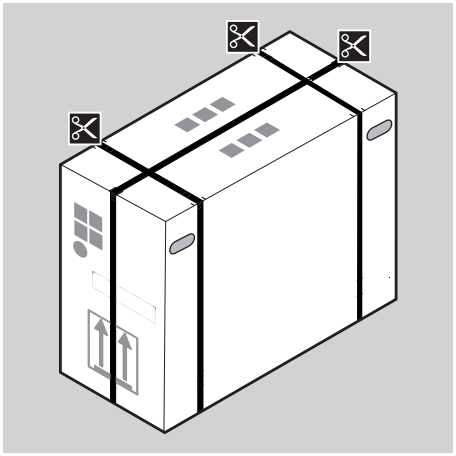

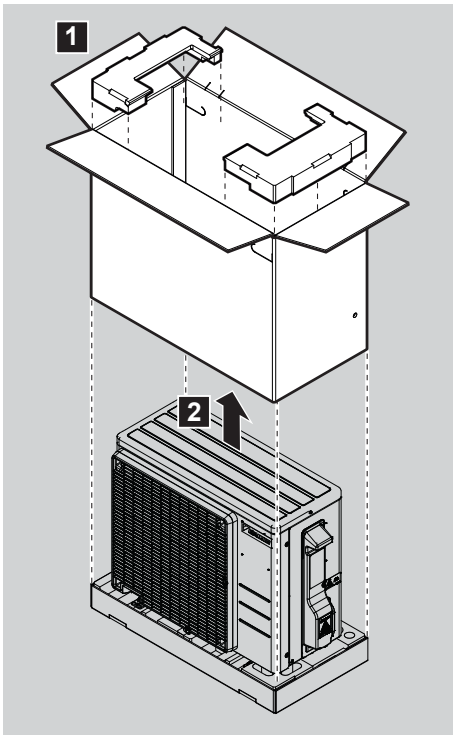

4.2.2 To remove the accessories from the outdoor unit

1 Lift the outdoor unit.

CAUTION

ONLY handle the outdoor unit as follows:

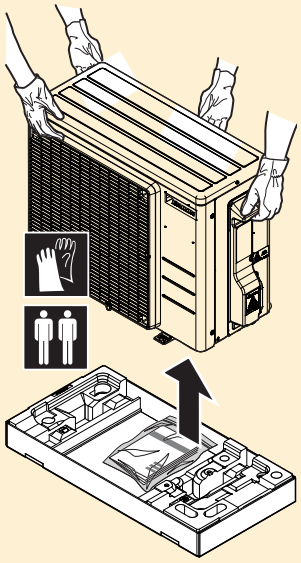

2 Remove the accessories at the bottom of the package.

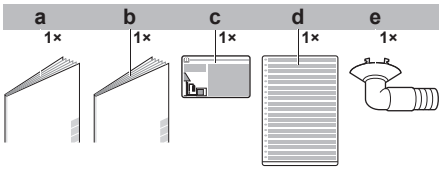

a General safety precautions
b Outdoor unit installation manual
c Fluorinated greenhouse gases label
d Multilingual fluorinated greenhouse gases label
e Drain plug (located on the bottom of the packing case)

5 About the units and options

5.1 Overview: About the units and options

This chapter contains information about:

- Identification of the outdoor unit

5.2 Identification

NOTICE

When installing or servicing several units at the same time, make sure NOT to switch the service panels between different models.

6 Unit installation

In this chapter

6.1 Preparing the installation site 24
6.1.1 Installation site requirements of the outdoor unit 25
6.1.2 Additional installation site requirements of the outdoor unit in cold climates 27
6.2 Opening the units 28
6.2.1 About opening the units 28
6.2.2 To open the outdoor unit 28
6.3 Mounting the outdoor unit 28
6.3.1 About mounting the outdoor unit 28
6.3.2 Precautions when mounting the outdoor unit 29
6.3.3 To provide the installation structure 29
6.3.4 To install the outdoor unit 30
6.3.5 To provide drainage 30
6.3.6 To prevent the outdoor unit from falling over 31

6.1 Preparing the installation site

WARNING

The appliance shall be stored so as to prevent mechanical damage and in a well-ventilated room without continuously operating ignition sources (e.g. open flames, an operating gas appliance, or an operating electric heater). The room size shall be as specified in the General safety precaution.

Choose an installation location with sufficient space to transport the unit in and out of the site.

Do NOT install the unit in places often used as work place. In case of construction works (e.g. grinding works) where a lot of dust is created, the unit MUST be covered.

CAUTION

- Check if the installation location can support the unit's weight. Poor installation is hazardous. It can also cause vibrations or unusual operating noise.
- Provide sufficient service space.
- Do NOT install the unit so that it is in contact with a ceiling or a wall, as this may cause vibrations.

- Choose a location where the operation noise or the hot/cold air discharged from the unit will not disturb anyone and the location is selected according the applicable legislation.
- Provide sufficient space around the unit for servicing and air circulation.
- Avoid areas where flammable gas or product might leak.
- Install units, power cables and communication wiring at least 3 m away from televisions or radios to prevent interference. Depending on the radio waves, a distance of 3 m may not be sufficient.

WARNING

Do NOT place objects below the indoor and/or outdoor unit that may get wet. Otherwise condensation on the unit or refrigerant pipes, air filter dirt or drain blockage may cause dripping, and objects under the unit may get dirty or damaged.

WARNING

Make sure installation, servicing, maintenance and repair comply with instructions from Daikin and with applicable legislation (for example national gas regulation) and are executed ONLY by authorised persons.

6.1.1 Installation site requirements of the outdoor unit

INFORMATION

Also read the following requirements:

- General installation site requirements. See the "General safety precautions" chapter.
- Refrigerant piping requirements (length, height difference). See further in this "Preparation" chapter.

Mind the following spacing guidelines:

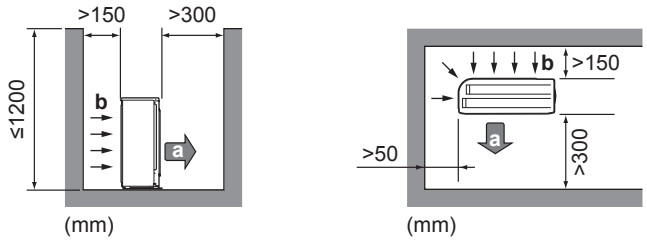

a Air outlet
b Air inlet

NOTICE

- Do NOT stack the units on each other.
- Do NOT hang the unit on a ceiling.

Strong winds (≥18 km/h) blowing against the outdoor unit's air outlet causes short circuit (suction of discharge air). This may result in:

- deterioration of the operational capacity;
- frequent frost acceleration in heating operation;
- disruption of operation due to decrease of low pressure or increase of high pressure;
- a broken fan (if a strong wind blows continuously on the fan, it may start rotating very fast, until it breaks).

It is recommended to install a baffle plate when the air outlet is exposed to wind.

It is recommended to install the outdoor unit with the air inlet facing the wall and NOT directly exposed to the wind.

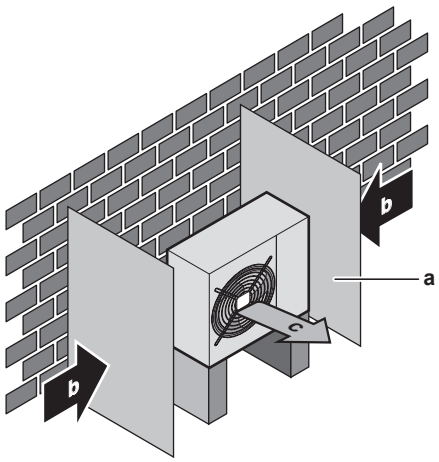

a Baffle plate
b Prevailing wind direction
c Air outlet

Do NOT install the unit in the following places:

- Sound sensitive areas (e.g. near a bedroom), so that the operation noise will cause no trouble.

  Note: If the sound is measured under actual installation conditions, the measured value might be higher than the sound pressure level mentioned in Sound spectrum in the data book due to environmental noise and sound reflections.

> **INFORMATION**
> The sound pressure level is less than 70 dBA.

- In places where a mineral oil mist, spray or vapour may be present in the atmosphere. Plastic parts may deteriorate and fall off or cause water leakage.

It is NOT recommended to install the unit in the following places because it may shorten the life of the unit:

- Where the voltage fluctuates a lot
- In vehicles or vessels
- Where acidic or alkaline vapour is present

Seaside installation. Make sure the outdoor unit is NOT directly exposed to sea winds. This is to prevent corrosion caused by high levels of salt in the air, which might shorten the life of the unit.

Install the outdoor unit away from direct sea winds.

Example: Behind the building.

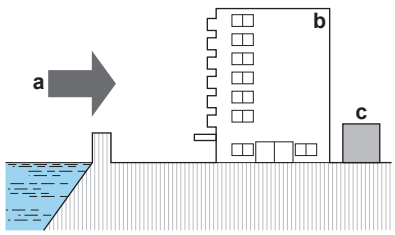

a Sea wind
b Building
c Outdoor unit

If the outdoor unit is exposed to direct sea winds, install a windbreaker.

- Height of windbreaker ≥1.5× height of outdoor unit

- Mind the service space requirements when installing the windbreaker.

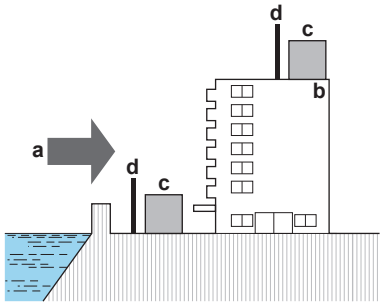

a Sea wind
b Building
c Outdoor unit
d Windbreaker

The outdoor unit is designed for outdoor installation only and for ambient temperatures specified in the table below (unless otherwise specified in the operation manual of the connected indoor unit).

Model	Cooling	Heating
(A)RXF, (A)RXP	–10~48°C DB	–15~24°C DB

INFORMATION

The sound pressure level is less than 70 dBA.

6.1.2 Additional installation site requirements of the outdoor unit in cold climates

Protect the outdoor unit against direct snowfall and take care that the outdoor unit is NEVER snowed up.

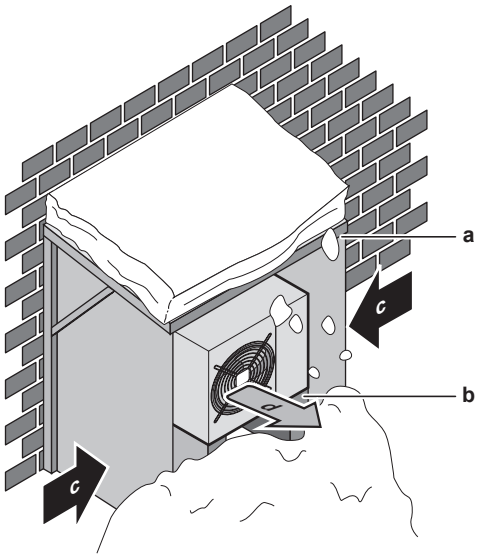

a Snow cover or shed
b Pedestal
c Prevailing wind direction
d Air outlet

In any case, provide at least 300 mm of free space below the unit. Additionally, make sure the unit is positioned at least 100 mm above the maximum expected level of snow. See "6.3 Mounting the outdoor unit" [▸ 28] for more details.

It is recommended to provide at least 150 mm of free space below the unit (300 mm for heavy snowfall areas). Additionally, make sure the unit is positioned at least 100 mm above the maximum expected level of snow. If necessary, construct a pedestal. See "6.3 Mounting the outdoor unit" [▸ 28] for more details.

In heavy snowfall areas it is very important to select an installation site where the snow will NOT affect the unit. If lateral snowfall is possible, make sure that the heat exchanger coil is NOT affected by the snow. If necessary, install a snow cover or shed and a pedestal.

6.2 Opening the units

6.2.1 About opening the units

At certain times, you have to open the unit. **Example:**

- When connecting the refrigerant piping
- When connecting the electrical wiring
- When maintaining or servicing the unit

DANGER: RISK OF ELECTROCUTION

Do NOT leave the unit unattended when the service cover is removed.

6.2.2 To open the outdoor unit

DANGER: RISK OF ELECTROCUTION

DANGER: RISK OF BURNING/SCALDING

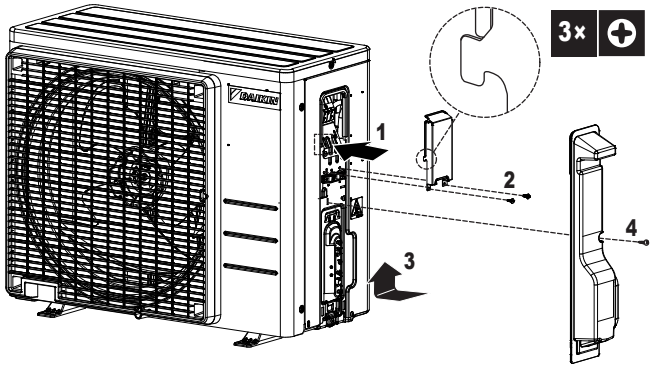

6.3 Mounting the outdoor unit

6.3.1 About mounting the outdoor unit

When

The outdoor and indoor unit must be mounted before the refrigerant piping can be connected.

Typical workflow

Mounting the outdoor unit typically consists of the following stages:

1 Providing the installation structure.
2 Installing the outdoor unit.
3 Providing drainage.

4 Preventing the unit from falling over.

5 Protecting the unit against snow and wind by installing a snow cover and baffle plates. See "6.1 Preparing the installation site" [▸ 24].

6.3.2 Precautions when mounting the outdoor unit

> **INFORMATION**
>
> Also read the precautions and requirements in the following chapters:
>
> - General safety precautions
> - Preparation

6.3.3 To provide the installation structure

Check the strength and level of the installation ground so that the unit will not cause any operating vibration or noise.

Use a vibration-proof rubber (field supply) in cases where vibrations may be transmitted to the building.

The unit may be installed directly on a concrete veranda or another solid surface as long as it provides proper drainage.

Fix the unit securely by means of foundation bolts in accordance with the foundation drawing.

Prepare 4 sets of M8 or M10 anchor bolts, nuts and washers (field supply).

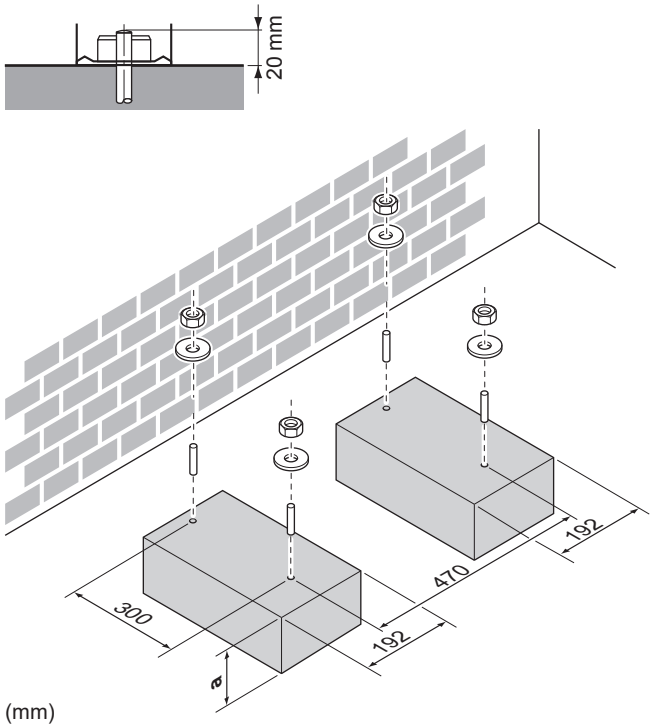

a 100 mm above expected level of snow

6.3.4 To install the outdoor unit

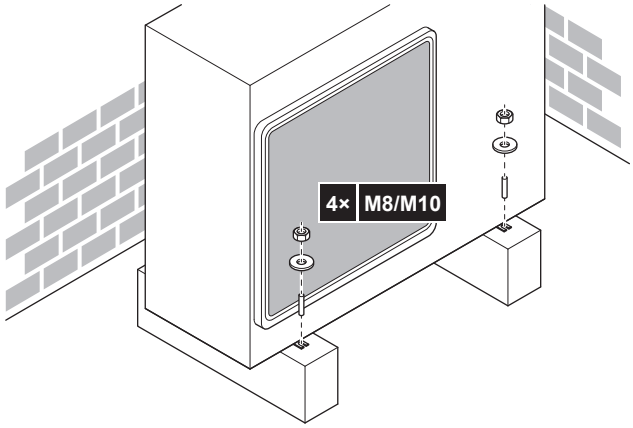

6.3.5 To provide drainage

- Make sure that condensation water can be evacuated properly.
- Install the unit on a base to make sure that there is proper drainage in order to avoid ice accumulation.
- Prepare a water drainage channel around the foundation to drain waste water away from the unit.
- Avoid drain water flowing over the footpath, so that it does NOT become slippery in case of ambient freezing temperatures.
- If you install the unit on a frame, install a waterproof plate within 150 mm of the bottom side of the unit in order to prevent water from getting into the unit and to avoid drain water dripping (see the following figure).

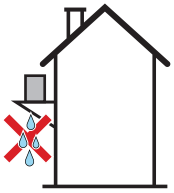

NOTICE

If the unit is installed in a cold climate, take adequate measures so that the evacuated condensate CANNOT freeze.

NOTICE

If the drain holes of the outdoor unit are blocked up by a mounting base or floor surface, place additional foot bases ≤30 mm under the outdoor unit's feet.

INFORMATION

For information on the available options, contact your dealer.

1 Use a drain plug for drainage.

2 Use a Ø16 mm hose (field supply).

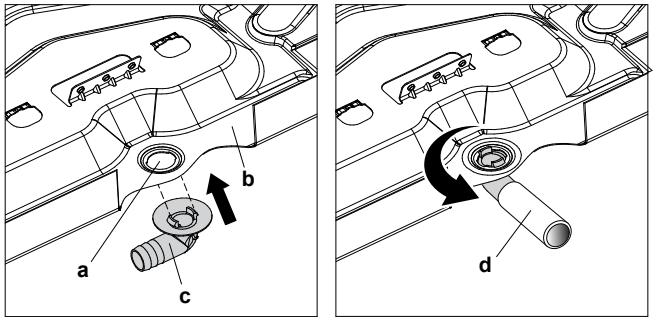

a Drain port
b Bottom frame
c Drain plug
d Hose (field supply)

6.3.6 To prevent the outdoor unit from falling over

In case the unit is installed in places where strong wind can tilt the unit, take following measure:

1 Prepare 2 cables as indicated in the following illustration (field supply).

2 Place the 2 cables over the outdoor unit.

3 Insert a rubber sheet between the cables and the outdoor unit to prevent the cables from scratching the paint (field supply).

4 Attach the ends of the cables.

5 Tighten the cables.

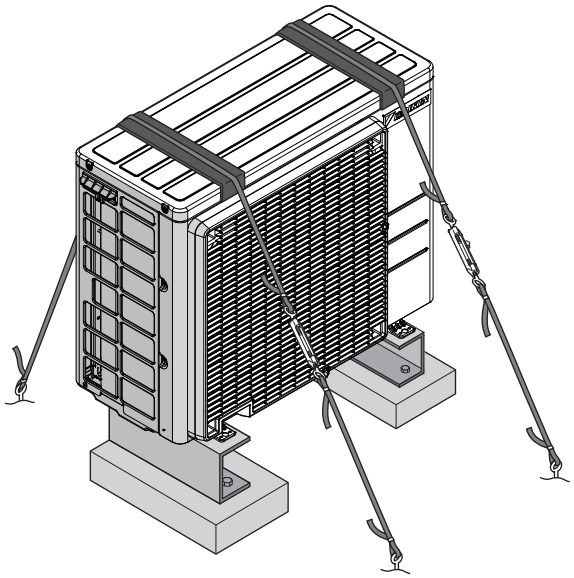

7 Piping installation

In this chapter

7.1 Preparing refrigerant piping 32
7.1.1 Refrigerant piping requirements 32
7.1.2 Refrigerant piping length and height difference 33
7.1.3 Refrigerant piping insulation 33
7.2 Connecting the refrigerant piping 33
7.2.1 About connecting the refrigerant piping 33
7.2.2 Precautions when connecting the refrigerant piping 33
7.2.3 Guidelines when connecting the refrigerant piping 34
7.2.4 Pipe bending guidelines 35
7.2.5 To flare the pipe end 35
7.2.6 Using the stop valve and service port 36
7.2.7 To connect the refrigerant piping to the outdoor unit 37
7.3 Checking the refrigerant piping 38
7.3.1 About checking the refrigerant piping 38
7.3.2 Precautions when checking the refrigerant piping 38
7.3.3 To check for leaks 39
7.3.4 To perform vacuum drying 39
7.4 Charging refrigerant 40
7.4.1 About charging refrigerant 40
7.4.2 About the refrigerant 41
7.4.3 To determine the additional refrigerant amount 41
7.4.4 To determine the complete recharge amount 42
7.4.5 To charge additional refrigerant 42
7.4.6 To fix the fluorinated greenhouse gases label 42

7.1 Preparing refrigerant piping

7.1.1 Refrigerant piping requirements

CAUTION

Piping and joints of a split system shall be made with permanent joints when inside an occupied space except joints directly connecting the piping to the indoor units.

INFORMATION

Also read the precautions and requirements in the "2 General safety precautions" [▶ 6].

Piping material

Phosphoric acid deoxidised seamless copper

Piping diameter

Liquid piping	Gas piping
Ø6.4 mm (1/4")	Ø9.5 mm (3/8")

Piping temper grade and thickness

Outer diameter (Ø)	Temper grade	Thickness (t)[a]	
6.4 mm (1/4")	Annealed (O)	≥0.8 mm	
9.5 mm (3/8")	Annealed (O)		

[a] Depending on the applicable legislation and the maximum working pressure of the unit (see "PS High" on the unit name plate), larger piping thickness might be required.

7.1.2 Refrigerant piping length and height difference

What?	Distance
Maximum allowable pipe length	20 m
Minimum allowable pipe length	1.5 m
Maximum allowable height difference	12 m

7.1.3 Refrigerant piping insulation

- Use polyethylene foam as insulation material:
  - with a heat transfer rate between 0.041 and 0.052 W/mK (0.035 and 0.045 kcal/mh°C)
  - with a heat resistance of at least 120°C
- Insulation thickness:

Pipe outer diameter ($Ø_p$)	Insulation inner diameter ($Ø_i$)	Insulation thickness (t)
6.4 mm (1/4")	8~10 mm	≥10 mm
9.5 mm (3/8")	12~15 mm	

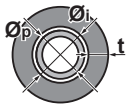

If the temperature is higher than 30°C and the humidity is higher than RH 80%, the thickness of the insulation materials should be at least 20 mm to prevent condensation on the surface of the insulation.

7.2 Connecting the refrigerant piping

7.2.1 About connecting the refrigerant piping

Before connecting the refrigerant piping

Make sure the outdoor and indoor unit are mounted.

Typical workflow

Connecting the refrigerant piping involves:

- Connecting the refrigerant piping to the indoor unit
- Connecting the refrigerant piping to the outdoor unit
- Insulating the refrigerant piping
- Keeping in mind the guidelines for:
  - Pipe bending
  - Flaring pipe ends
  - Using the stop valves

7.2.2 Precautions when connecting the refrigerant piping



DANGER: RISK OF BURNING/SCALDING

NOTICE

- Use the flare nut fixed to the main unit.
- To prevent gas leakage, apply refrigeration oil only to the inside of the flare. Use refrigeration oil for R32 (**Example:** FW68DA, SUNISO Oil).
- Do NOT reuse joints.

NOTICE

- Do NOT use mineral oil on flared part.
- Do NOT reuse piping from previous installations.
- NEVER install a drier to this R32 unit to guarantee its lifetime. The drying material may dissolve and damage the system.

NOTICE

Take the following precautions on refrigerant piping into account:

- Avoid anything but the designated refrigerant to get mixed into the refrigerant cycle (e.g. air).
- Only use R32 when adding refrigerant.
- Only use installation tools (e.g. manifold gauge set) that are exclusively used for R32 installations to withstand the pressure and to prevent foreign materials (e.g. mineral oils and moisture) from mixing into the system.
- Install the piping so that the flare is NOT subjected to mechanical stress.
- Do NOT leave pipes unattended at the site. If the installation is NOT done within 1 day, protect the piping as described in the following table to prevent dirt, liquid or dust from entering the piping.
- Use caution when passing copper tubes through walls (see figure below).

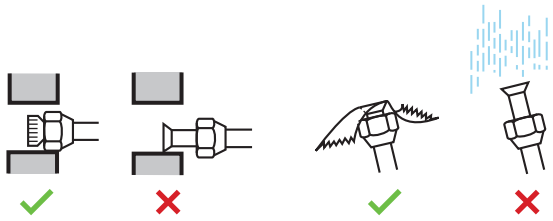

Unit	Installation period	Protection method
Outdoor unit	>1 month	Pinch the pipe
	<1 month	Pinch or tape the pipe
Indoor unit	Regardless of the period	

NOTICE

Do NOT open the refrigerant stop valve before checking the refrigerant piping. When you need to charge additional refrigerant it is recommended to open the refrigerant stop valve after charging.

WARNING

Connect the refrigerant piping securely before running the compressor. If the refrigerant piping is NOT connected and the stop valve is open when the compressor is run, air will be sucked in. This will cause abnormal pressure in the refrigeration cycle, which may result in equipment damage and even injury.

7.2.3 Guidelines when connecting the refrigerant piping

Take the following guidelines into account when connecting pipes:

- Coat the flare inner surface with ether oil or ester oil when connecting a flare nut. Tighten 3 or 4 turns by hand, before tightening firmly.

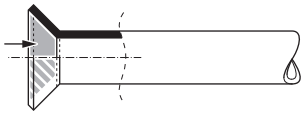

- ALWAYS use two wrenches together when loosening a flare nut.
- ALWAYS use a spanner and torque wrench together to tighten the flare nut when connecting the piping. This to prevent nut cracking and leaks.

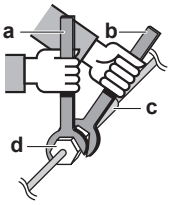

a Torque wrench
b Spanner
c Piping union
d Flare nut

Piping size (mm)	Tightening torque (N•m)	Flare dimensions (A) (mm)	Flare shape (mm)
Ø6.35	15~17	8.7~9.1	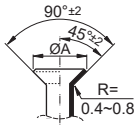
Ø9.52	33~39	12.8~13.2	

7.2.4 Pipe bending guidelines

Use a pipe bender for bending. All pipe bends should be as gentle as possible (bending radius should be 30~40 mm or larger).

7.2.5 To flare the pipe end

CAUTION

- Incomplete flaring may cause refrigerant gas leakage.
- Do NOT re-use flares. Use new flares to prevent refrigerant gas leakage.
- Use flare nuts that are included with the unit. Using different flare nuts may cause refrigerant gas leakage.

1. Cut the pipe end with a pipe cutter.
2. Remove burrs with the cut surface facing down so that the chips do NOT enter the pipe.

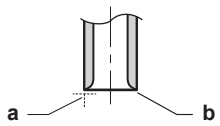

a Cut exactly at right angles.
b Remove burrs.

3. Remove the flare nut from the stop valve and put the flare nut on the pipe.
4. Flare the pipe. Set exactly at the position as shown in the following figure.

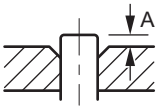

	Flare tool for R32 (clutch type)	Conventional flare tool	
		Clutch type (Ridgid-type)	Wing nut type (Imperial-type)
A	0~0.5 mm	1.0~1.5 mm	1.5~2.0 mm

5 Check that the flaring is properly made.

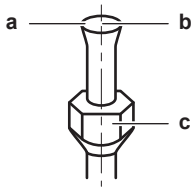

a Flare's inner surface MUST be flawless.
b The pipe end MUST be evenly flared in a perfect circle.
c Make sure the flare nut is fitted.

7.2.6 Using the stop valve and service port

CAUTION
Do NOT open the valves before flaring is complete. This would cause refrigerant gas leakage.

To handle the stop valve

Take the following guidelines into account:

- The stop valves are factory closed.
- The following figure shows the stop valve parts required when handling the valve.

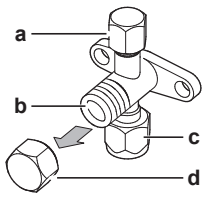

a Service port and service port cap
b Valve stem
c Field piping connection
d Stem cap

- Keep both stop valves open during operation.
- Do NOT apply excessive force to the valve stem. Doing so may break the valve body.
- ALWAYS make sure to secure the stop valve with a spanner, then loosen or tighten the flare nut with a torque wrench. Do NOT place the spanner on the stem cap, as this could cause a refrigerant leak.

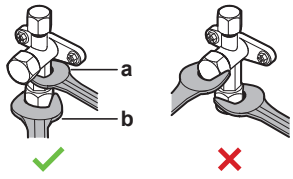

a Spanner
b Torque wrench

- When it is expected that the operating pressure will be low (e.g. when cooling will be performed while the outside air temperature is low), sufficiently seal the flare nut in the stop valve on the gas line with silicon sealant to prevent freezing.

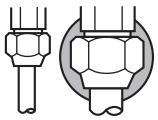

Silicon sealant, make sure there is no gap.

To open/close the stop valve

1. Remove the stop valve cover.
2. Insert a hexagon wrench (liquid side: 4 mm, gas side: 4 mm) into the valve stem and turn the valve stem:

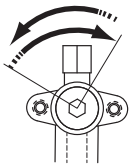

Counterclockwise to open
Clockwise to close

3. When the stop valve CANNOT be turned any further, stop turning.
4. Install the stop valve cover.

Result: The valve is now open/closed.

To handle the stem cap

- The stem cap is sealed where indicated with the arrow. Do NOT damage it.

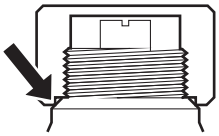

- After handling the stop valve, tighten the stem cap, and check for refrigerant leaks.

Item	Tightening torque (N·m)
Stem cap, liquid side	21.6~27.4
Stem cap, gas side	21.6~27.4

To handle the service cap

- ALWAYS use a charge hose equipped with a valve depressor pin, since the service port is a Schrader type valve.
- After handling the service port, tighten the service port cap, and check for refrigerant leaks.

Item	Tightening torque (N·m)
Service port cap	10.8~14.7

7.2.7 To connect the refrigerant piping to the outdoor unit

- **Piping length.** Keep field piping as short as possible.
- **Piping protection.** Protect the field piping against physical damage.

1 Connect the liquid refrigerant connection from the indoor unit to the liquid stop valve of the outdoor unit.

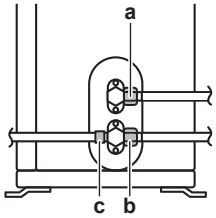

a Liquid stop valve
b Gas stop valve
c Service port

2 Connect the gas refrigerant connection from the indoor unit to the gas stop valve of the outdoor unit.

NOTICE

It is recommended that the refrigerant piping between indoor and outdoor unit is installed in a ducting or the refrigerant piping is wrapped with finishing tape.

7.3 Checking the refrigerant piping

7.3.1 About checking the refrigerant piping

The outdoor unit's **internal** refrigerant piping has been factory tested for leaks. You only have to check the outdoor unit's **external** refrigerant piping.

Before checking the refrigerant piping

Make sure the refrigerant piping is connected between the outdoor unit and the indoor unit.

Typical workflow

Checking the refrigerant piping typically consists of the following stages:

1 Checking for leaks in the refrigerant piping.
2 Performing vacuum drying to remove all moisture, air or nitrogen from the refrigerant piping.

If there is a possibility of moisture being present in the refrigerant piping (for example, water may have entered the piping), first carry out the vacuum drying procedure below until all moisture has been removed.

7.3.2 Precautions when checking the refrigerant piping

INFORMATION

Also read the precautions and requirements in the following chapters:

- General safety precautions
- Preparation

NOTICE

Use a 2-stage vacuum pump with a non-return valve that can evacuate to a gauge pressure of −100.7 kPa (−1.007 bar)(5 Torr absolute). Make sure the pump oil does not flow oppositely into the system while the pump is not working.

NOTICE

Use this vacuum pump for R32 exclusively. Using the same pump for other refrigerants may damage the pump and the unit.

NOTICE

- Connect the vacuum pump to the service port of the gas stop valve.
- Make sure that the gas stop valve and liquid stop valve are firmly closed before performing the leak test or vacuum drying.

7.3.3 To check for leaks

NOTICE

Do NOT exceed the unit's maximum working pressure (see "PS High" on the unit name plate).

NOTICE

ALWAYS use a recommended bubble test solution from your wholesaler.

NEVER use soap water:

- Soap water may cause cracking of components, such as flare nuts or stop valve caps.
- Soap water may contain salt, which absorbs moisture that will freeze when the piping gets cold.
- Soap water contains ammonia which may lead to corrosion of flared joints (between the brass flare nut and the copper flare).

1. Charge the system with nitrogen gas up to a gauge pressure of at least 200 kPa (2 bar). It is recommended to pressurize to 3000 kPa (30 bar) or higher (depending on local legislation) to detect small leaks.
2. Check for leaks by applying the bubble test solution to all connections.
3. Discharge all nitrogen gas.

7.3.4 To perform vacuum drying

1. Vacuum the system until the pressure reaches on the manifold indicates -0.1 MPa (-1 bar)
2. Leave as is for 4-5 minutes and check the pressure:

If the pressure...	Then...
Does not change	There is no moisture in the system. This procedure is finished.
Increases	There is moisture in the system. Go to the next step.

3. Vacuum the system for at least two hours to a manifold pressure pf -0.1 MPa (-1 bar).
4. After turning the pump OFF, check the pressure for at least one hour.
5. If you do NOT reach the target vacuum or CANNOT maintain the vacuum for one hour, do the following:
   - Check for leaks again.
   - Perform vacuum drying again.

NOTICE

Make sure to open the stop valves after installing the refrigerant piping and performing vacuum drying. Running the system with the stop valves closed may break the compressor.

7.4 Charging refrigerant

7.4.1 About charging refrigerant

The outdoor unit is factory charged with refrigerant, but in some cases the following might be necessary:

What	When
Charging additional refrigerant	When the total liquid piping length is more than specified (see later).
Completely recharging refrigerant	**Example:** ▪ When relocating the system. ▪ After a leak.

Charging additional refrigerant

Before charging additional refrigerant, make sure the outdoor unit's **external** refrigerant piping is checked (leak test, vacuum drying).

INFORMATION

Depending on the units and/or the installation conditions, it might be necessary to connect electrical wiring before you can charge refrigerant.

Typical workflow – Charging additional refrigerant typically consists of the following stages:

1 Determining if and how much you have to charge additionally.

2 If necessary, charging additional refrigerant.

3 Filling in the fluorinated greenhouse gases label, and fixing it to the inside of the outdoor unit.

Completely recharging refrigerant

Before completely recharging refrigerant, make sure the following is done:

1 All refrigerant is recovered from the system.

2 The outdoor unit's **external** refrigerant piping is checked (leak test, vacuum drying).

3 Vacuum drying on the outdoor unit's **internal** refrigerant piping is performed.

NOTICE

Before completely recharging, perform vacuum drying on the outdoor unit's **internal** refrigerant piping as well.

Typical workflow – Completely recharging refrigerant typically consists of the following stages:

1 Determining how much refrigerant to charge.

2 Charging refrigerant.

3 Filling in the fluorinated greenhouse gases label, and fixing it to the inside of the outdoor unit.

7.4.2 About the refrigerant

This product contains fluorinated greenhouse gases. Do NOT vent gases into the atmosphere.

Refrigerant type: R32

Global warming potential (GWP) value: 675

Periodical inspections for refrigerant leaks may be required depending on the applicable legislation. Contact your installer for more information.



WARNING: MILDLY FLAMMABLE MATERIAL

The refrigerant inside this unit is mildly flammable.



WARNING

- The refrigerant inside the unit is mildly flammable, but normally does NOT leak. If the refrigerant leaks in the room and comes in contact with fire from a burner, a heater, or a cooker, this may result in fire, or the formation of a harmful gas.
- Turn OFF any combustible heating devices, ventilate the room, and contact the dealer where you purchased the unit.
- Do NOT use the unit until a service person confirms that the part from which the refrigerant leaked has been repaired.



WARNING

The appliance shall be stored so as to prevent mechanical damage and in a well-ventilated room without continuously operating ignition sources (e.g. open flames, an operating gas appliance, or an operating electric heater). The room size shall be as specified in the General safety precaution.



WARNING

- Do NOT pierce or burn refrigerant cycle parts.
- Do NOT use cleaning materials or means to accelerate the defrosting process other than those recommended by the manufacturer.
- Be aware that the refrigerant inside the system is odourless.



NOTICE

Applicable legislation on **fluorinated greenhouse gases** requires that the refrigerant charge of the unit is indicated both in weight and CO_2 equivalent.

Formula to calculate the quantity in CO_2 equivalent tonnes: GWP value of the refrigerant × total refrigerant charge [in kg]/1000

Contact your installer for more information.

7.4.3 To determine the additional refrigerant amount

If the total liquid piping length is…	Then…
≤10 m	Do NOT add additional refrigerant.
>10 m	R=(total length (m) of liquid piping–10 m)×0.020 R=Additional charge (kg) (rounded in units of 0.01 kg)

INFORMATION

Piping length is the one-way length of liquid piping.

7.4.4 To determine the complete recharge amount

INFORMATION

If a complete recharge is necessary, the total refrigerant charge is: the factory refrigerant charge (see unit name plate) + the determined additional amount.

7.4.5 To charge additional refrigerant

WARNING

- Only use R32 as refrigerant. Other substances may cause explosions and accidents.
- R32 contains fluorinated greenhouse gases. Its global warming potential (GWP) value is 675. Do NOT vent these gases into the atmosphere.
- When charging refrigerant, ALWAYS use protective gloves and safety glasses.

NOTICE

To avoid compressor breakdown, do NOT charge more than the specified amount of refrigerant.

Prerequisite: Before charging refrigerant, make sure the refrigerant piping is connected and checked (leak test and vacuum drying).

1. Connect the refrigerant cylinder to the service port.
2. Charge the additional refrigerant amount.
3. Open the gas stop valve.

If pump down is needed in case of dismantling or relocating the system, see "14.2 To pump down" [▸ 57] for more details.

7.4.6 To fix the fluorinated greenhouse gases label

1. Fill in the label as follows:

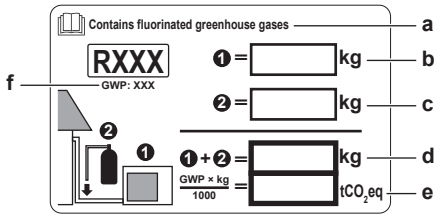

a If a multilingual fluorinated greenhouse gases label is delivered with the unit (see accessories), peel off the applicable language and stick it on top of **a**.
b Factory refrigerant charge: see unit name plate
c Additional refrigerant amount charged
d Total refrigerant charge
e **Quantity of fluorinated greenhouse gases** of the total refrigerant charge expressed as tonnes CO_2 equivalent.
f GWP = Global Warming Potential

NOTICE

Applicable legislation on **fluorinated greenhouse gases** requires that the refrigerant charge of the unit is indicated both in weight and CO_2 equivalent.

Formula to calculate the quantity in CO_2 equivalent tonnes: GWP value of the refrigerant × total refrigerant charge [in kg] / 1000

Use the GWP value mentioned on the refrigerant charge label.

2 Fix the label on the inside of the outdoor unit near the gas and liquid stop valves.

8 Electrical installation

In this chapter

8.1 Preparing electrical wiring 44
8.1.1 About preparing electrical wiring 44
8.2 Connecting the electrical wiring 45
8.2.1 About connecting the electrical wiring 45
8.2.2 Precautions when connecting the electrical wiring 45
8.2.3 Guidelines when connecting the electrical wiring 46
8.2.4 Specifications of standard wiring components 47
8.2.5 To connect the electrical wiring to the outdoor unit 47

8.1 Preparing electrical wiring

8.1.1 About preparing electrical wiring

INFORMATION

Also read the precautions and requirements in the "2 General safety precautions" [▶ 6].

INFORMATION

Also read "8.2.4 Specifications of standard wiring components" [▶ 47].

WARNING

- If the power supply has a missing or wrong N-phase, equipment might break down.
- Establish proper earthing. Do NOT earth the unit to a utility pipe, surge absorber, or telephone earth. Incomplete earthing may cause electrical shocks.
- Install the required fuses or circuit breakers.
- Secure the electrical wiring with cable ties so that the cables do NOT come in contact with sharp edges or piping, particularly on the high-pressure side.
- Do NOT install a phase advancing capacitor, because this unit is equipped with an inverter. A phase advancing capacitor will reduce performance and may cause accidents.

WARNING

- All wiring MUST be performed by an authorised electrician and MUST comply with the national wiring regulation.
- Make electrical connections to the fixed wiring.
- All components procured on-site and all electrical construction MUST comply with the applicable legislation.

WARNING

ALWAYS use multicore cable for power supply cables.

8.2 Connecting the electrical wiring

8.2.1 About connecting the electrical wiring

Typical workflow

Connecting the electrical wiring typically consists of the following stages:

1. Making sure the power supply system complies with the electrical specifications of the units.
2. Connecting the electrical wiring to the outdoor unit.
3. Connecting the electrical wiring to the indoor unit.
4. Connecting the main power supply.

8.2.2 Precautions when connecting the electrical wiring



DANGER: RISK OF ELECTROCUTION



WARNING

- All wiring MUST be performed by an authorised electrician and MUST comply with the national wiring regulation.
- Make electrical connections to the fixed wiring.
- All components procured on-site and all electrical construction MUST comply with the applicable legislation.



WARNING

ALWAYS use multicore cable for power supply cables.



WARNING

If the supply cord is damaged, it MUST be replaced by the manufacturer, its service agent or similarly qualified persons in order to avoid a hazard.



WARNING

Do NOT extend the power supply or the interconnection cable by using wire connectors, wire connection clamps, taped wires, extension cords.

These can cause overheating, electric shock or fire.



WARNING

Do NOT connect the power supply to the indoor unit. This could result in electrical shock or fire.



WARNING

- Do NOT use locally purchased electrical parts inside the product.
- Do NOT branch the power supply for the drain pump, etc. from the terminal block. This could result in electrical shock or fire.



WARNING

Keep the interconnection wiring away from copper pipes without thermal insulation as such pipes will be very hot.

INFORMATION

Also read the precautions and requirements in the following chapters:

- General safety precautions
- Preparation

8.2.3 Guidelines when connecting the electrical wiring

NOTICE

We recommend using solid (single-core) wires. If stranded wires are used, slightly twist the strands to consolidate the end of the conductor for either direct use in the terminal clamp or insertion in a round crimp-style terminal.

To prepare stranded conductor wire for installation

Method 1: Twisting conductor

1 Strip insulation (20 mm) from the wires.

2 Slightly twist the end of the conductor to create a "solid-like" connection.

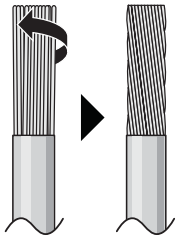

Method 2: Using round crimp-style terminal (recommended)

1 Strip insulation from wires and slightly twist the end of each wire.

2 Install a round crimp-style terminal on the end of the wire. Place the round crimp-style terminal on the wire up to the covered part and fasten the terminal with the appropriate tool.

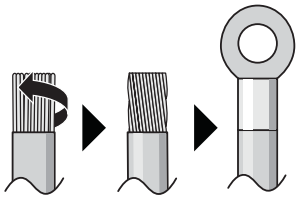

Use the following methods for installing wires:

Wire type	Installation method
Single-core wire Or Stranded conductor wire twisted to "solid-like" connection	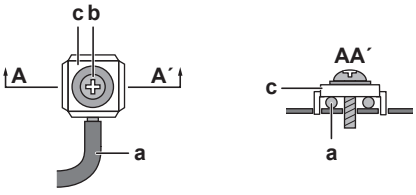 **a** Curled wire (single-core or twisted stranded conductor wire) **b** Screw **c** Flat washer

Wire type	Installation method
Stranded conductor wire with round crimp-style terminal	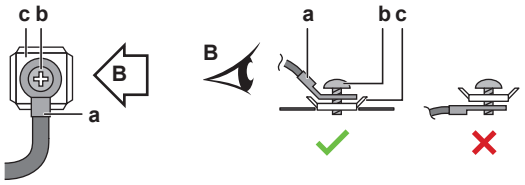 **a** Terminal **b** Screw **c** Flat washer ✓ Allowed ✗ NOT allowed

Tightening torques

Item	Tightening torque (N•m)
M4 (X1M)	1.2~1.5
M4 (earth)	

- The earth wire between the wire retainer and the terminal must be longer than the other wires.

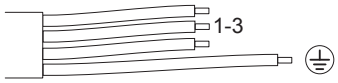

8.2.4 Specifications of standard wiring components

Component		
Power supply cable	Voltage	220~240 V
	Phase	1~
	Frequency	50 Hz
	Wire sizes	MUST comply with applicable legislation
Interconnection cable (indoor↔outdoor)		4-core cable ≥1.5 mm² and applicable for 220~240 V
Recommended field fuse		16 A
Earth leakage circuit breaker		MUST comply with applicable legislation

8.2.5 To connect the electrical wiring to the outdoor unit

WARNING

Do NOT extend the power supply or the interconnection cable by using wire connectors, wire connection clamps, taped wires, extension cords.

These can cause overheating, electric shock or fire.

1 Strip insulation (20 mm) from the wires.

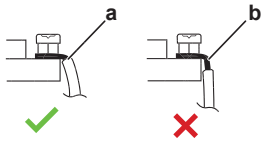

a Strip wire end to this point
b An excessive strip length may cause electrical shock or leakage

2 Remove the shield plate.

3 Open the wire clamp.

4 Connect the interconnection cable and power supply as follows:

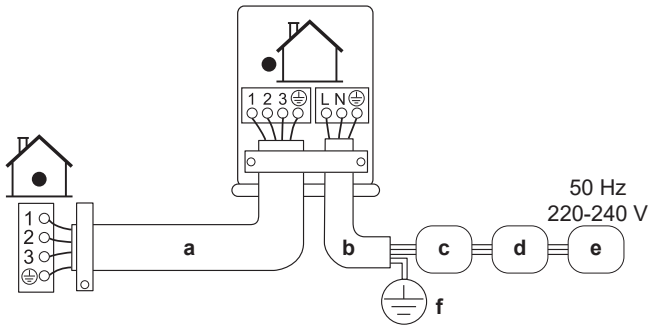

a Interconnection cable
b Power supply cable
c Circuit breaker (field provided fuse with rating according to the model name plate)
d Residual current device
e Power supply
f Earth

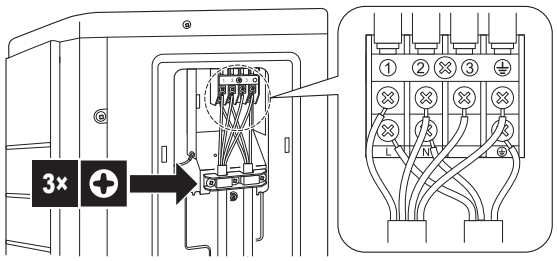

5 Tighten the terminal screws securely. We recommend using a Phillips screwdriver.

9 Finishing the outdoor unit installation

9.1 To finish the outdoor unit installation

NOTICE

It is recommended that the refrigerant piping between indoor and outdoor unit is installed in a ducting or the refrigerant piping is wrapped with finishing tape.

1 Insulate and fix the refrigerant piping and cables as follows:

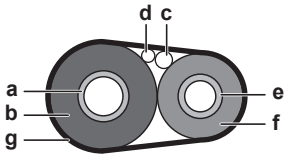

a Gas pipe
b Gas pipe insulation
c Interconnection cable
d Field wiring (if applicable)
e Liquid pipe
f Liquid pipe insulation
g Finishing tape

2 Install the service cover.

9.2 To close the outdoor unit

NOTICE

When closing the outdoor unit cover, make sure that the tightening torque does NOT exceed 1.3 N•m.

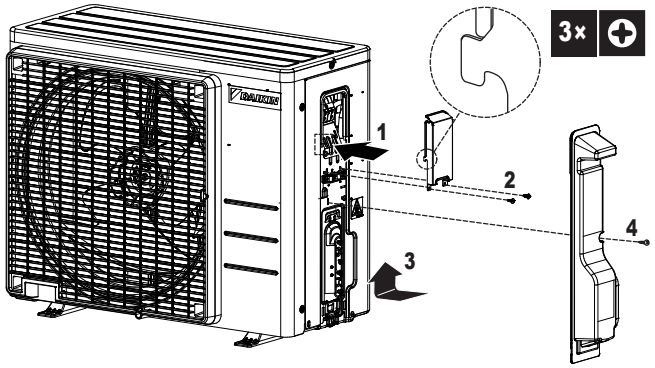

10 Commissioning

10.1 Overview: Commissioning

This chapter describes what you have to do and know to commission the system after it is installed.

Typical workflow

Commissioning typically consists of the following stages:

1 Checking the "Checklist before commissioning".
2 Performing a test run for the system.

10.2 Precautions when commissioning



DANGER: RISK OF ELECTROCUTION



DANGER: RISK OF BURNING/SCALDING



CAUTION

Do NOT perform the test operation while working on the indoor unit(s).

When performing the test operation, NOT ONLY the outdoor unit, but the connected indoor unit will operate as well. Working on an indoor unit while performing a test operation is dangerous.



CAUTION

Do NOT insert fingers, rods or other objects into the air inlet or outlet. Do NOT remove the fan guard. When the fan is rotating at high speed, it will cause injury.



NOTICE

Turn ON the power 6 hours before operation in order to have power running to the crankcase heater and to protect the compressor.



NOTICE

ALWAYS operate the unit with thermistors and/or pressure sensors/switches. If NOT, burning of the compressor might be the result.

During test operation, the outdoor unit and the indoor units will start up. Make sure that the preparations of all indoor units are finished (field piping, electrical wiring, air purge, ...). See installation manual of the indoor units for details.

10.3 Checklist before commissioning

1 After the installation of the unit, check the items listed below.
2 Close the unit.
3 Power up the unit.

☐	The **indoor unit** is properly mounted.
☐	The **outdoor unit** is properly mounted.
☐	The system is properly **earthed** and the earth terminals are tightened.
☐	The **power supply voltage** matches the voltage on the identification label of the unit.
☐	There are NO **loose connections** or damaged electrical components in the switch box.
☐	There are NO **damaged components** or **squeezed pipes** on the inside of the indoor and outdoor units.
☐	There are NO **refrigerant leaks**.
☐	The **refrigerant pipes** (gas and liquid) are thermally insulated.
☐	The correct pipe size is installed and the **pipes** are properly insulated.
☐	The **stop valves** (gas and liquid) on the outdoor unit are fully open.
☐	The following **field wiring** has been carried out according to this document and the applicable legislation between the outdoor unit and the indoor unit.
☐	**Drainage** Make sure drainage flows smoothly. **Possible consequence:** Condensate water might drip.
☐	The indoor unit receives the signals of the **user interface**.
☐	The specified wires are used for the **interconnection cable**.
☐	The **fuses, circuit breakers,** or locally installed protection devices are installed according to this document, and have NOT been bypassed.

10.4 Checklist during commissioning

☐	To perform an **air purge**.
☐	To perform a **test run**.

10.5 To perform a test run

Prerequisite: The power supply MUST be in the specified range.

Prerequisite: Test run may be performed in cooling or heating mode.

Prerequisite: Refer to the operation manual of the indoor unit for setting temperature, operation mode….

1. In cooling mode, select the lowest programmable temperature. In heating mode, select the highest programmable temperature. The test run can be disabled if necessary.
2. When the test run is finished, set the temperature to a normal level. In cooling mode: 26~28°C, in heating mode: 20~24°C.
3. Make sure that all functions and parts are working properly.
4. The system stops operating 3 minutes after the unit is turned OFF.

INFORMATION

- Even if the unit is turned OFF, it consumes electricity.
- When the power turns back on after a power break, the previously selected mode will be resumed.

10.6 Starting up the outdoor unit

See the indoor unit installation manual for configuration and commissioning of the system.

11 Hand-over to the user

Once the test run is finished and the unit operates properly, make sure the following is clear for the user:

- Make sure that the user has the printed documentation and ask him/her to keep it for future reference. Inform the user that he/she can find the complete documentation at the URL mentioned earlier in this manual.
- Explain to the user how to properly operate the system and what to do in case of problems.
- Show the user what to do for the maintenance of the unit.
- Explain about energy saving tips to the user as described in the operation manual.

12 Maintenance and service

NOTICE

Maintenance MUST be done by an authorised installer or service agent.

We recommend performing maintenance at least once a year. However, applicable legislation might require shorter maintenance intervals.

12.1 Overview: Maintenance and service

This chapter contains information about:

- Maintenance safety precautions
- The yearly maintenance of the outdoor unit

12.2 Maintenance safety precautions



DANGER: RISK OF ELECTROCUTION



DANGER: RISK OF BURNING/SCALDING



WARNING

- Before carrying out any maintenance or repair activity, ALWAYS switch off the circuit breaker on the supply panel, remove the fuses or open the protection devices of the unit.
- Do NOT touch live parts for 10 minutes after the power supply is turned off because of high voltage risk.
- Please note that some sections of the electric component box are hot.
- Make sure you do NOT touch a conductive section.
- Do NOT rinse the unit. This may cause electric shocks or fire.

NOTICE: Risk of electrostatic discharge

Before performing any maintenance or service work, touch a metal part of the unit in order to eliminate static electricity and to protect the PCB.

12.3 Checklist for yearly maintenance of the outdoor unit

Check the following at least once a year:

- Heat exchanger

  The heat exchanger of the outdoor unit can get blocked up due to dust, dirt, leaves, etc. It is recommended to clean the heat exchanger yearly. A blocked heat exchanger can lead to too low pressure or too high pressure leading to worse performance.

13 Troubleshooting

13.1 Overview: Troubleshooting

This chapter describes what you have to do in case of problems.

It contains information about solving problems based on symptoms.

Before troubleshooting

Carry out a thorough visual inspection of the unit and look for obvious defects such as loose connections or defective wiring.

13.2 Precautions when troubleshooting



DANGER: RISK OF ELECTROCUTION



DANGER: RISK OF BURNING/SCALDING



WARNING

- When carrying out an inspection on the switch box of the unit, ALWAYS make sure that the unit is disconnected from the mains. Turn off the respective circuit breaker.
- When a safety device was activated, stop the unit and find out why the safety device was activated before resetting it. NEVER shunt safety devices or change their values to a value other than the factory default setting. If you are unable to find the cause of the problem, call your dealer.



WARNING

Prevent hazards due to inadvertent resetting of the thermal cut-out: power to this appliance MUST NOT be supplied through an external switching device, such as a timer, or connected to a circuit that is regularly turned ON and OFF by the utility.

13.3 Solving problems based on symptoms

13.3.1 Symptom: Indoor units fall, vibrate or make noise

Possible causes	Corrective action
The indoor units are NOT installed securely.	Install the indoor units securely.

13.3.2 Symptom: The unit is NOT heating or cooling as expected

Possible causes	Corrective action
Wrong connection of the electrical wires	Connect the electrical wires correctly.
Gas leakage	Check for gas leakage.

13.3.3 Symptom: Water leakage

Possible causes	Corrective action
Incomplete thermal insulation (gas and liquid piping, indoor portions of the drain hose extension).	Make sure the thermal insulation of the piping and the drain hose is complete.
Improperly connected drainage.	Secure the drainage.

13.3.4 Symptom: Electrical leakage

Possible causes	Corrective action
The unit is NOT earthed correctly.	Check and correct the connection of the earth wiring.

13.3.5 Symptom: Unit does NOT function or burn damage

Possible causes	Corrective action
The wiring was NOT performed in accordance with the specifications.	Correct the wiring.

14 Disposal

NOTICE

Do NOT try to dismantle the system yourself: dismantling of the system, treatment of the refrigerant, oil and other parts MUST comply with applicable legislation. Units MUST be treated at a specialised treatment facility for reuse, recycling and recovery.

14.1 Overview: Disposal

Typical workflow

Disposing of the system typically consists of the following stages:

1 Pumping down the system.

2 Bringing the system to a specialized treatment facility.

INFORMATION

For more details, see the service manual.

14.2 To pump down

DANGER: RISK OF EXPLOSION

Pump down – Refrigerant leakage. If you want to pump down the system, and there is a leak in the refrigerant circuit:

- Do NOT use the unit's automatic pump down function, with which you can collect all refrigerant from the system into the outdoor unit. **Possible consequence:** Self-combustion and explosion of the compressor because of air going into the operating compressor.
- Use a separate recovery system so that the unit's compressor does NOT have to operate.

NOTICE

During pump down operation, stop the compressor before removing the refrigerant piping. If the compressor is still running and the stop valve is open during pump down, air will be sucked into the system. Compressor breakdown or damage to the system can result due to abnormal pressure in the refrigerant cycle.

Pump down operation will extract all refrigerant from the system into the outdoor unit.

1 Remove the valve cap from the liquid stop valve and the gas stop valve.

2 Carry out forced cooling. See "14.3 To start and stop forced cooling" [▸ 58].

3 After 5 to 10 minutes (after only 1 or 2 minutes in case of very low ambient temperatures (<–10°C)), close the liquid stop valve with a hexagonal wrench.

4 Check on the manifold if the vacuum is reached.

5 After 2-3 minutes, close the gas stop valve and stop forced cooling.

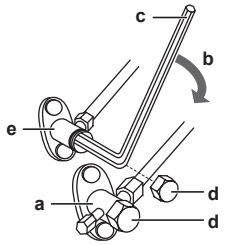

a Gas stop valve
b Closing direction
c Hexagonal wrench
d Valve cap
e Liquid stop valve

14.3 To start and stop forced cooling

There are 2 methods to perform forced cooling.

- **Method 1.** Using the indoor unit ON/OFF switch (if present on the indoor unit).
- **Method 2.** Using the indoor unit user interface.

14.3.1 To start and stop forced cooling using the indoor unit ON/OFF switch

1 Press the ON/OFF switch for at least 5 seconds.

Result: Operation will start.

> **INFORMATION**
> Forced cooling stops automatically after 15 minutes.

2 To stop operation sooner, press the ON/OFF switch.

14.3.2 To start and stop forced cooling using the indoor unit user interface

1 Set the operation mode to **cooling**. Refer to "To perform a test run" in the installation manual of the indoor unit.

15 Technical data

A **subset** of the latest technical data is available on the regional Daikin website (publicly accessible). The **full set** of the latest technical data is available on the Daikin Business Portal (authentication required).

15.1 Wiring diagram

Unified Wiring Diagram Legend

For applied parts and numbering, refer to the wiring diagram on the unit. Part numbering is by Arabic numbers in ascending order for each part and is represented in the overview below by symbol "*" in the part code.

: CIRCUIT BREAKER		: PROTECTIVE EARTH	
: CONNECTION		: PROTECTIVE EARTH (SCREW)	
: CONNECTOR		: RECTIFIER	
: EARTH		: RELAY CONNECTOR	
: FIELD WIRING		: SHORT-CIRCUIT CONNECTOR	
: FUSE		: TERMINAL	
: INDOOR UNIT		: TERMINAL STRIP	
: OUTDOOR UNIT		: WIRE CLAMP	

BLK : BLACK	GRN : GREEN	PNK : PINK	WHT : WHITE
BLU : BLUE	GRY : GREY	PRP, PPL : PURPLE	YLW : YELLOW
BRN : BROWN	ORG : ORANGE	RED : RED	

A*P	: PRINTED CIRCUIT BOARD	PS	: SWITCHING POWER SUPPLY
BS*	: PUSHBUTTON ON/OFF, OPERATION SWITCH	PTC*	: THERMISTOR PTC
BZ, H*O	: BUZZER	Q*	: INSULATED GATE BIPOLAR TRANSISTOR (IGBT)
C*	: CAPACITOR		
AC*, CN*, E*, HA*, HE*, HL*, HN*, HR*, MR*_A, MR*_B, S*, U, V, W, X*A, K*R_*	: CONNECTION, CONNECTOR	Q*DI	: EARTH LEAK CIRCUIT BREAKER
		Q*L	: OVERLOAD PROTECTOR
		Q*M	: THERMO SWITCH
D*, V*D	: DIODE	R*	: RESISTOR
DB*	: DIODE BRIDGE	R*T	: THERMISTOR
DS*	: DIP SWITCH	RC	: RECEIVER
E*H	: HEATER	S*C	: LIMIT SWITCH
F*U, FU* (FOR CHARACTERISTICS, REFER TO PCB INSIDE YOUR UNIT)	: FUSE	S*L	: FLOAT SWITCH
		S*NPH	: PRESSURE SENSOR (HIGH)
FG*	: CONNECTOR (FRAME GROUND)	S*NPL	: PRESSURE SENSOR (LOW)
H*	: HARNESS	S*PH, HPS*	: PRESSURE SWITCH (HIGH)
H*P, LED*, V*L	: PILOT LAMP, LIGHT EMITTING DIODE	S*PL	: PRESSURE SWITCH (LOW)
HAP	: LIGHT EMITTING DIODE (SERVICE MONITOR GREEN)	S*T	: THERMOSTAT
HIGH VOLTAGE	: HIGH VOLTAGE	S*RH	: HUMIDITY SENSOR
IES	: INTELLIGENT EYE SENSOR	S*W, SW*	: OPERATION SWITCH
IPM*	: INTELLIGENT POWER MODULE	SA*, F1S	: SURGE ARRESTOR
K*R, KCR, KFR, KHuR, K*M	: MAGNETIC RELAY	SR*, WLU	: SIGNAL RECEIVER
L	: LIVE	SS*	: SELECTOR SWITCH
L*	: COIL	SHEET METAL	: TERMINAL STRIP FIXED PLATE
L*R	: REACTOR	T*R	: TRANSFORMER
M*	: STEPPER MOTOR	TC, TRC	: TRANSMITTER
M*C	: COMPRESSOR MOTOR	V*, R*V	: VARISTOR
M*F	: FAN MOTOR	V*R	: DIODE BRIDGE
M*P	: DRAIN PUMP MOTOR	WRC	: WIRELESS REMOTE CONTROLLER
M*S	: SWING MOTOR	X*	: TERMINAL
MR*, MRCW*, MRM*, MRN*	: MAGNETIC RELAY	X*M	: TERMINAL STRIP (BLOCK)
N	: NEUTRAL	Y*E	: ELECTRONIC EXPANSION VALVE COIL
n=*, N=*	: NUMBER OF PASSES THROUGH FERRITE CORE	Y*R, Y*S	: REVERSING SOLENOID VALVE COIL
PAM	: PULSE-AMPLITUDE MODULATION	Z*C	: FERRITE CORE
PCB*	: PRINTED CIRCUIT BOARD	ZF, Z*F	: NOISE FILTER
PM*	: POWER MODULE		

16 Glossary

Dealer
Sales distributor for the product.

Authorised installer
Technical skilled person who is qualified to install the product.

User
Person who is owner of the product and/or operates the product.

Applicable legislation
All international, European, national and local directives, laws, regulations and/or codes that are relevant and applicable for a certain product or domain.

Service company
Qualified company which can perform or coordinate the required service to the product.

Installation manual
Instruction manual specified for a certain product or application, explaining how to install, configure and maintain it.

Operation manual
Instruction manual specified for a certain product or application, explaining how to operate it.

Maintenance instructions
Instruction manual specified for a certain product or application, which explains (if relevant) how to install, configure, operate and/or maintain the product or application.

Accessories
Labels, manuals, information sheets and equipment that are delivered with the product and that need to be installed according to the instructions in the accompanying documentation.

Optional equipment
Equipment made or approved by Daikin that can be combined with the product according to the instructions in the accompanying documentation.

Field supply
Equipment NOT made by Daikin that can be combined with the product according to the instructions in the accompanying documentation.

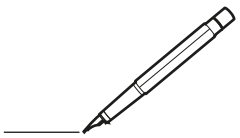

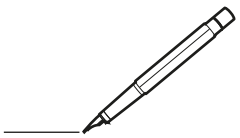

DAIKIN ISITMA VE SOĞUTMA SİSTEMLERİ SAN. TİC. A.Ş.
Gülsuyu Mahallesi, Fevzi Çakmak Caddesi, Burçak Sokak, No:20, 34848 Maltepe
İSTANBUL / TÜRKİYE
Tel: 0216 453 27 00
Faks: 0216 671 06 00
Çağrı Merkezi: 444 999 0
Web: www.daikin.com.tr

Copyright 2026 Daikin

DAIKIN EUROPE N.V.
Zandvoordestraat 300, B-8400 Oostende, Belgium

4P769827-27N 2026.07