Installation manual



R32 split series

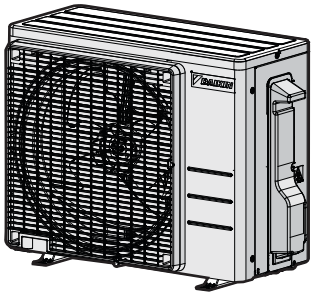

ARXF20J5V1B
ARXF25J5V1B
ARXF35J5V1B
ARXF42J5V1B

Installation manual
R32 split series

English

Table of contents

1 About the documentation 2
1.1 About this document 2
2 Specific installer safety instructions 3
3 About the box 5
3.1 Outdoor unit 5
3.1.1 To unpack the outdoor unit 5
3.1.2 To remove the accessories from the outdoor unit 5
4 Unit installation 5
4.1 Preparing the installation site 5
4.1.1 Installation site requirements of the outdoor unit 5
4.1.2 Additional installation site requirements of the outdoor unit in cold climates 6
4.2 Mounting the outdoor unit 6
4.2.1 To provide the installation structure 6
4.2.2 To install the outdoor unit 6
4.2.3 To provide drainage 6
4.2.4 To prevent the outdoor unit from falling over 7
5 Piping installation 7
5.1 Preparing refrigerant piping 7
5.1.1 Refrigerant piping requirements 7
5.1.2 Refrigerant piping length and height difference 7
5.1.3 Refrigerant piping insulation 7
5.2 Connecting the refrigerant piping 7
5.2.1 About connecting the refrigerant piping 7
5.2.2 Precautions when connecting the refrigerant piping 8
5.2.3 To connect the refrigerant piping to the outdoor unit 8
5.3 Checking the refrigerant piping 8
5.3.1 To check for leaks 8
5.3.2 To perform vacuum drying 8
6 Charging refrigerant 8
6.1 About charging refrigerant 8
6.2 About the refrigerant 9
6.3 To determine the additional refrigerant amount 9
6.4 To determine the complete recharge amount 9
6.5 To charge additional refrigerant 9
6.6 To fix the fluorinated greenhouse gases label 9
7 Electrical installation 10
7.1 Specifications of standard wiring components 10
7.2 To connect the electrical wiring to the outdoor unit 10
8 Finishing the outdoor unit installation 11
8.1 To finish the outdoor unit installation 11
8.2 To close the outdoor unit 11
9 Maintenance and service 11
10 Commissioning 11
10.1 Checklist before commissioning 11
10.2 Checklist during commissioning 11
10.3 To perform a test run 11
10.4 Starting up the outdoor unit 12
11 Troubleshooting 12
11.1 Fault diagnosis using LED on outdoor unit PCB 12
12 Disposal 12
13 Technical data 13
13.1 Wiring diagram 13
13.1.1 Unified wiring diagram legend 13
13.2 Piping diagram 15
13.2.1 Piping diagram: Outdoor unit 15

1 About the documentation

1.1 About this document

WARNING

Make sure installation, servicing, maintenance, repair and applied materials follow the instructions from Daikin (including all documents listed in “Documentation set”) and, in addition, comply with applicable legislation and are performed by qualified persons only. In Europe and areas where IEC standards apply, EN/IEC 60335-2-40 is the applicable standard.

INFORMATION

Make sure that the user has the printed documentation and ask him/her to keep it for future reference.

Target audience

Authorised installers

INFORMATION

This appliance is intended to be used by expert or trained users in shops, in light industry, and on farms, or for commercial and household use by lay persons.

INFORMATION

This document only describes installation instructions specific to the outdoor unit. For installation of the indoor unit (mounting the indoor unit, connecting the refrigerant piping to the indoor unit, connecting the electrical wiring to the indoor unit …), see the installation manual of the indoor unit.

Documentation set

This document is part of a documentation set. The complete set consists of:

- **General safety precautions:**
  - Safety instructions that you MUST read before installing
  - Format: Paper (in the box of the outdoor unit)
- **Outdoor unit installation manual:**
  - Installation instructions
  - Format: Paper (in the box of the outdoor unit)
- **Installer reference guide:**
  - Preparation of the installation, reference data, …
  - Format: Digital files on https://www.daikin.eu. Use the search function to find your model.

The latest revision of the supplied documentation is published on the regional Daikin website and is available via your dealer.

Scan the QR code below to find the full documentation set and more information about your product on the Daikin website.

ARXF-J

The original instructions are written in English. All other languages are translations of the original instructions.

Technical engineering data

- A **subset** of the latest technical data is available on the regional Daikin website (publicly accessible).
- The **full set** of the latest technical data is available on the Daikin Business Portal (authentication required).

2 Specific installer safety instructions

Always observe the following safety instructions and regulations.

Unit installation (see "4 Unit installation" [▶ 5])

WARNING

Installation shall be done by an installer, the choice of materials and installation shall comply with the applicable legislation. In Europe, EN378 is the applicable standard.

Installation site (see "4.1 Preparing the installation site" [▶ 5])

CAUTION

- Check if the installation location can support the unit's weight. Poor installation is hazardous. It can also cause vibrations or unusual operating noise.
- Provide sufficient service space.
- Do NOT install the unit so that it is in contact with a ceiling or a wall, as this may cause vibrations.

WARNING

The appliance shall be stored so as to prevent mechanical damage and in a well-ventilated room without continuously operating ignition sources (e.g. open flames, an operating gas appliance, or an operating electric heater). The room size shall be as specified in the General safety precaution.

Connecting the refrigerant piping (see "5.2 Connecting the refrigerant piping" [▶ 7])

CAUTION

Piping and joints of a split system shall be made with permanent joints when inside an occupied space except joints directly connecting the piping to the indoor units.

CAUTION

- No brazing or welding on site for units with R32 refrigerant charge during shipment.
- During installation of the refrigeration system, joining of parts with at least one part charged shall be performed taking into account the following requirements: inside occupied spaces non-permanent joints are NOT allowed for R32 refrigerant except for site made joints directly connecting the indoor unit to piping. Site made joints directly connecting piping to indoor units shall be of non-permanent type.

NOTICE

- Use the flare nut fixed to the unit.
- To prevent gas leakage, apply refrigeration oil ONLY to the inside of the flare. Use refrigeration oil for R32 (FW68DA).
- Do NOT reuse joints.

NOTICE

- Do NOT use mineral oil on flared part.
- Do NOT reuse piping from previous installations.
- NEVER install a drier to this R32 unit to guarantee its lifetime. The drying material may dissolve and damage the system.

WARNING

Connect the refrigerant piping securely before running the compressor. If the refrigerant piping is NOT connected and the stop valve is open when the compressor is run, air will be sucked in. This will cause abnormal pressure in the refrigeration cycle, which may result in equipment damage and even injury.

CAUTION

- Incomplete flaring may cause refrigerant gas leakage.
- Do NOT re-use flares. Use new flares to prevent refrigerant gas leakage.
- Use flare nuts that are included with the unit. Using different flare nuts may cause refrigerant gas leakage.

CAUTION

Do NOT open the valves before flaring is complete. This would cause refrigerant gas leakage.

DANGER: RISK OF EXPLOSION

Do NOT open the stop valves before the vacuum drying is finished.

Charging refrigerant (see "6 Charging refrigerant" [▶ 8])

WARNING

- The refrigerant inside the unit is mildly flammable, but normally does NOT leak. If the refrigerant leaks in the room and comes in contact with fire from a burner, a heater, or a cooker, this may result in fire, or the formation of a harmful gas.
- Turn OFF any combustible heating devices, ventilate the room, and contact the dealer where you purchased the unit.
- Do NOT use the unit until a service person confirms that the part from which the refrigerant leaked has been repaired.

WARNING

- Only use R32 as refrigerant. Other substances may cause explosions and accidents.
- R32 contains fluorinated greenhouse gases. Its global warming potential (GWP) value is 675. Do NOT vent these gases into the atmosphere.
- When charging refrigerant, ALWAYS use protective gloves and safety glasses.

NOTICE

To avoid compressor breakdown, do NOT charge more than the specified amount of refrigerant.

WARNING

NEVER directly touch any accidental leaking refrigerant. This could result in severe wounds caused by frostbite.

Electrical installation (see "7 Electrical installation" [▶ 10])

WARNING

The appliance MUST be installed in accordance with national wiring regulations.

WARNING

- All wiring MUST be performed by an authorised electrician and MUST comply with the national wiring regulation.
- Make electrical connections to the fixed wiring.
- All components procured on-site and all electrical construction MUST comply with the applicable legislation.

2 Specific installer safety instructions

WARNING

- If the power supply has a missing or wrong N-phase, equipment might break down.
- Establish proper earthing. Do NOT earth the unit to a utility pipe, surge absorber, or telephone earth. Incomplete or incorrect earthing may cause electrical shocks.
- Install the required fuses or circuit breakers.
- Secure the electrical wiring with cable ties so that the cables do NOT come in contact with sharp edges or piping, particularly on the high-pressure side.
- Do NOT use taped wires, extension cords, or connections from a star system. They can cause overheating, electrical shocks or fire.
- Do NOT install a phase advancing capacitor, because this unit is equipped with an inverter. A phase advancing capacitor will reduce performance and may cause accidents.

WARNING

ALWAYS use multicore cable for power supply cables.

WARNING

Use an all-pole disconnection type breaker with at least 3 mm between the contact point gaps that provides full disconnection under overvoltage category III.

WARNING

If the supply cord is damaged, it MUST be replaced by the manufacturer, its service agent or similarly qualified persons in order to avoid a hazard.

WARNING

Do NOT connect the power supply to the indoor unit. This could result in electrical shock or fire.

WARNING

- Do NOT use locally purchased electrical parts inside the product.
- Do NOT branch the power supply for the drain pump, etc. from the terminal block. This could result in electrical shock or fire.

WARNING

Keep the interconnection wiring away from copper pipes without thermal insulation as such pipes will be very hot.

DANGER: RISK OF ELECTROCUTION

All electrical parts (including thermistors) are powered by the power supply. Do NOT touch them with bare hands.

DANGER: RISK OF ELECTROCUTION

Disconnect the power supply for more than 10 minutes, and measure the voltage at the terminals of main circuit capacitors or electrical components before servicing. The voltage MUST be less than 50 V DC before you can touch electrical components. For the location of the terminals, see the wiring diagram.

Finishing indoor unit installation (see "8 Finishing the outdoor unit installation" [▸ 11])

DANGER: RISK OF ELECTROCUTION

- Make sure that the system is earthed properly.
- Turn OFF the power supply before servicing.
- Install the switch box cover before turning ON the power supply.

Commissioning (see "10 Commissioning" [▸ 11])

DANGER: RISK OF ELECTROCUTION

DANGER: RISK OF BURNING/SCALDING

CAUTION

Do NOT perform the test operation while working on the indoor unit(s).

When performing the test operation, NOT ONLY the outdoor unit, but the connected indoor unit will operate as well. Working on an indoor unit while performing a test operation is dangerous.

CAUTION

Do NOT insert fingers, rods or other objects into the air inlet or outlet. Do NOT remove the fan guard. When the fan is rotating at high speed, it will cause injury.

WARNING: MILDLY FLAMMABLE MATERIAL

The refrigerant inside this unit is mildly flammable.

Maintenance and service (see "9 Maintenance and service" [▸ 11])

DANGER: RISK OF ELECTROCUTION

DANGER: RISK OF BURNING/SCALDING

WARNING

- Before carrying out any maintenance or repair activity, ALWAYS switch off the circuit breaker on the supply panel, remove the fuses or open the protection devices of the unit.
- Do NOT touch live parts for 10 minutes after the power supply is turned off because of high voltage risk.
- Please note that some sections of the electric component box are hot.
- Make sure you do NOT touch a conductive section.
- Do NOT rinse the unit. This may cause electric shocks or fire.

DANGER: RISK OF ELECTROCUTION

- Use this compressor on a grounded system only.
- Turn the power off before servicing the compressor.
- Reattach the switch box cover and service lid after servicing.

CAUTION

ALWAYS wear safety glasses and protective gloves.

DANGER: RISK OF EXPLOSION

- Use a pipe cutter to remove the compressor.
- Do NOT use the brazing torch.
- Use approved refrigerants and lubricants only.

DANGER: RISK OF BURNING/SCALDING

Do NOT touch the compressor with bare hands.

3 About the box

3.1 Outdoor unit

3.1.1 To unpack the outdoor unit

WARNING

Make sure installation, servicing, maintenance and repair comply with instructions from Daikin and with applicable legislation (for example national gas regulation) and are executed ONLY by authorised persons.

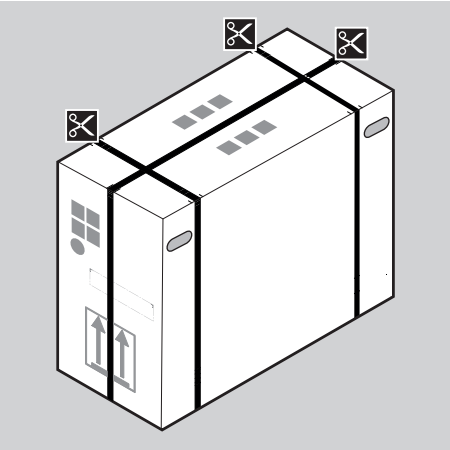

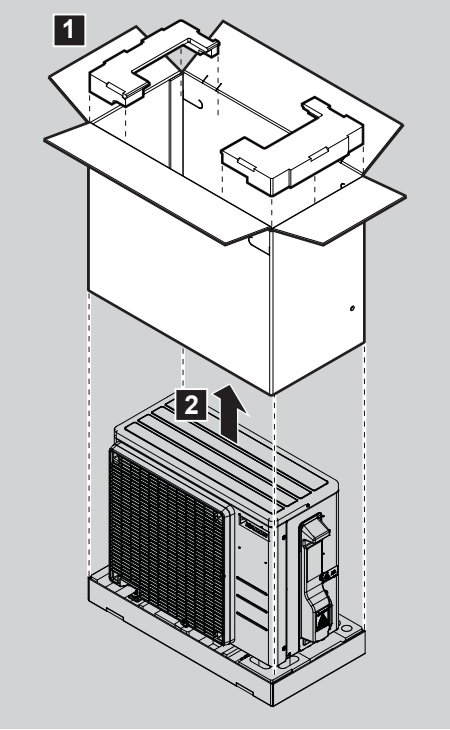

3.1.2 To remove the accessories from the outdoor unit

Make sure you have all following accessories delivered with the unit:

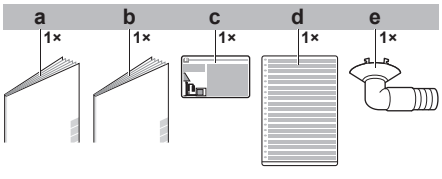

a General safety precautions
b Outdoor unit installation manual
c Fluorinated greenhouse gases label
d Multilingual fluorinated greenhouse gases label
e Drain plug (located on the bottom of the packing case)

4 Unit installation

4.1 Preparing the installation site

WARNING

The appliance shall be stored so as to prevent mechanical damage and in a well-ventilated room without continuously operating ignition sources (e.g. open flames, an operating gas appliance, or an operating electric heater). The room size shall be as specified in the General safety precaution.

WARNING

Make sure installation, servicing, maintenance and repair comply with instructions from Daikin and with applicable legislation (for example national gas regulation) and are executed ONLY by authorised persons.

4.1.1 Installation site requirements of the outdoor unit

Mind the following spacing guidelines:

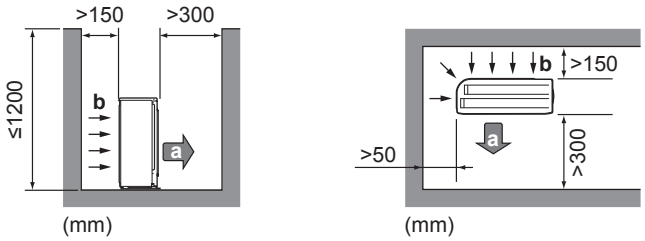

a Air outlet
b Air inlet

It is recommended to install a baffle plate when the air outlet is exposed to wind.

It is recommended to install the outdoor unit with the air inlet facing the wall and NOT directly exposed to the wind.

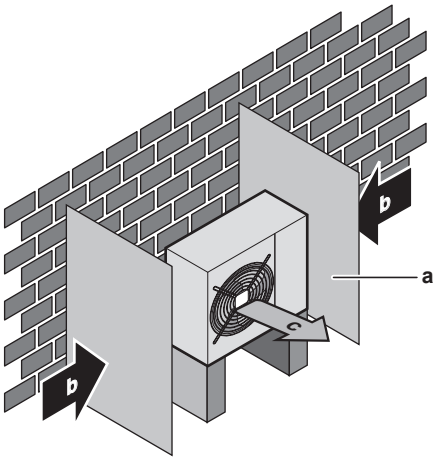

a Baffle plate
b Prevailing wind direction
c Air outlet

The outdoor unit is designed for outdoor installation only and for ambient temperatures specified in the table below (unless otherwise specified in the operation manual of the connected indoor unit).

Model	Cooling	Heating
(A)RXF, (A)RXP	–10~48°C DB	–15~24°C DB

INFORMATION

The sound pressure level is less than 70 dBA.

4.1.2 Additional installation site requirements of the outdoor unit in cold climates

Protect the outdoor unit against direct snowfall and take care that the outdoor unit is NEVER snowed up.

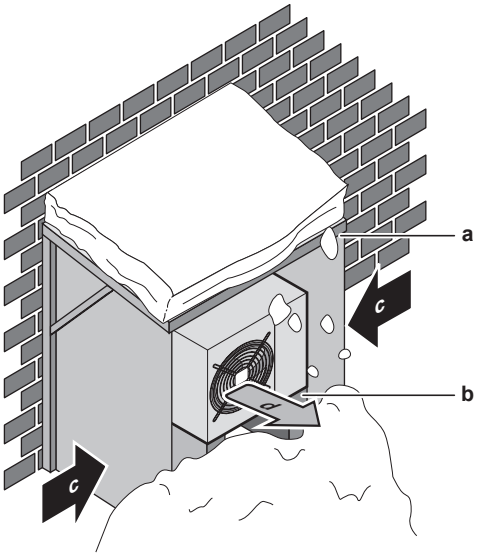

a Snow cover or shed
b Pedestal
c Prevailing wind direction
d Air outlet

In any case, provide at least 300 mm of free space below the unit. Additionally, make sure the unit is positioned at least 100 mm above the maximum expected level of snow. See "4.2 Mounting the outdoor unit" [▸ 6] for more details.

It is recommended to provide at least 150 mm of free space below the unit (300 mm for heavy snowfall areas). Additionally, make sure the unit is positioned at least 100 mm above the maximum expected level of snow. If necessary, construct a pedestal. See "4.2 Mounting the outdoor unit" [▸ 6] for more details.

In heavy snowfall areas it is very important to select an installation site where the snow will NOT affect the unit. If lateral snowfall is possible, make sure that the heat exchanger coil is NOT affected by the snow. If necessary, install a snow cover or shed and a pedestal.

4.2 Mounting the outdoor unit

4.2.1 To provide the installation structure

Use a vibration-proof rubber (field supply) in cases where vibrations may be transmitted to the building.

The unit may be installed directly on a concrete veranda or another solid surface as long as it provides proper drainage.

Prepare 4 sets of M8 or M10 anchor bolts, nuts and washers (field supply).

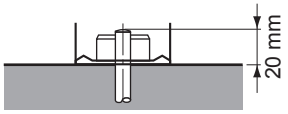

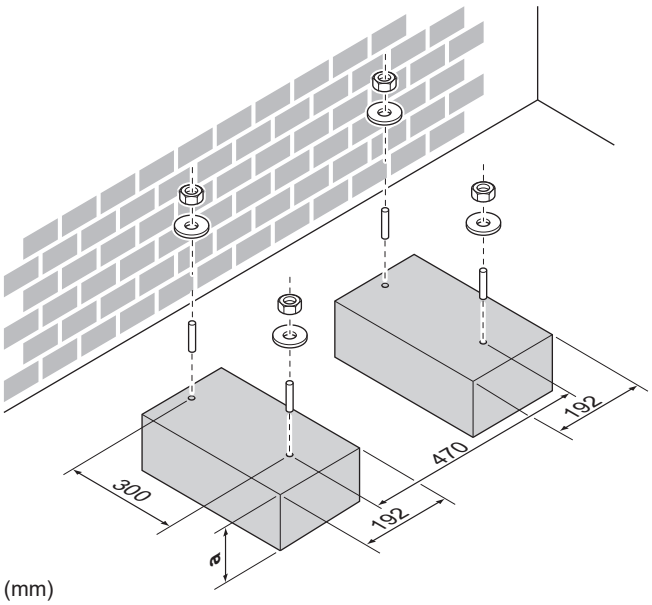

(mm)

a 100 mm above expected level of snow

4.2.2 To install the outdoor unit

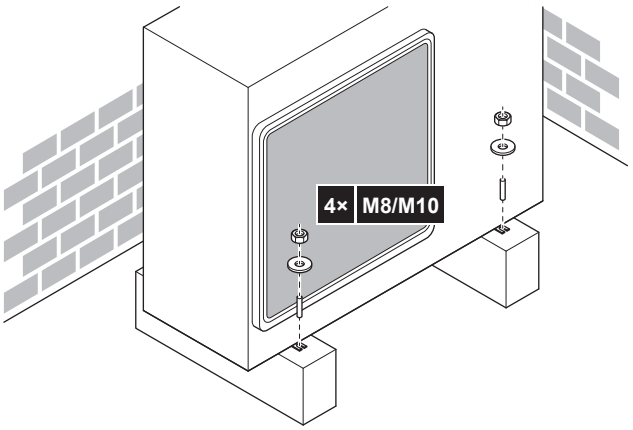

4.2.3 To provide drainage

NOTICE

If the unit is installed in a cold climate, take adequate measures so that the evacuated condensate CANNOT freeze.

NOTICE

If the drain holes of the outdoor unit are blocked up by a mounting base or floor surface, place additional foot bases ≤30 mm under the outdoor unit's feet.

INFORMATION

For information on the available options, contact your dealer.

1 Use a drain plug for drainage.

2 Use a Ø16 mm hose (field supply).

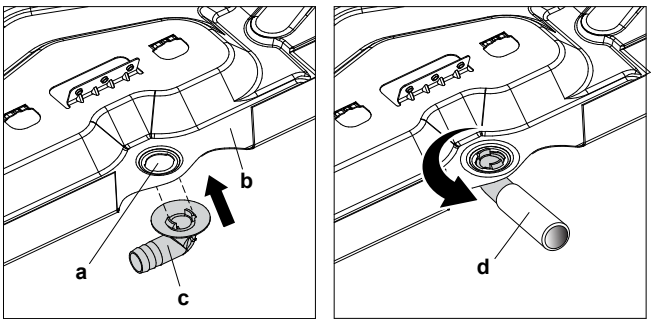

a Drain port
b Bottom frame
c Drain plug
d Hose (field supply)

4.2.4 To prevent the outdoor unit from falling over

In case the unit is installed in places where strong wind can tilt the unit, take following measure:

1. Prepare 2 cables as indicated in the following illustration (field supply).
2. Place the 2 cables over the outdoor unit.
3. Insert a rubber sheet between the cables and the outdoor unit to prevent the cables from scratching the paint (field supply).
4. Attach the ends of the cables.
5. Tighten the cables.

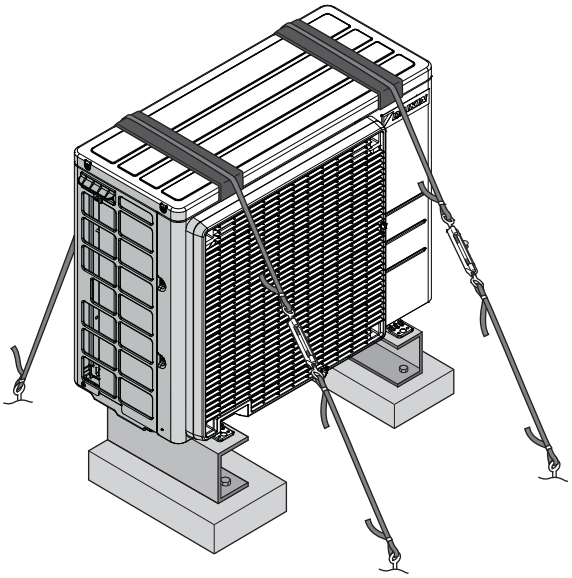

5 Piping installation

5.1 Preparing refrigerant piping

5.1.1 Refrigerant piping requirements

CAUTION

Piping and joints of a split system shall be made with permanent joints when inside an occupied space except joints directly connecting the piping to the indoor units.

Piping material

Phosphoric acid deoxidised seamless copper

Piping diameter

Liquid piping	Gas piping
Ø6.4 mm (1/4")	Ø9.5 mm (3/8")

Piping temper grade and thickness

Outer diameter (Ø)	Temper grade	Thickness (t)[a]	
6.4 mm (1/4")	Annealed (O)	≥0.8 mm	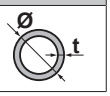
9.5 mm (3/8")	Annealed (O)		

[a] Depending on the applicable legislation and the maximum working pressure of the unit (see "PS High" on the unit name plate), larger piping thickness might be required.

5.1.2 Refrigerant piping length and height difference

What?	Distance
Maximum allowable pipe length	20 m
Minimum allowable pipe length	1.5 m
Maximum allowable height difference	12 m

5.1.3 Refrigerant piping insulation

- Use polyethylene foam as insulation material:
  - with a heat transfer rate between 0.041 and 0.052 W/mK (0.035 and 0.045 kcal/mh°C)
  - with a heat resistance of at least 120°C
- Insulation thickness:

Pipe outer diameter ($Ø_p$)	Insulation inner diameter ($Ø_i$)	Insulation thickness (t)
6.4 mm (1/4")	8~10 mm	≥10 mm
9.5 mm (3/8")	12~15 mm	

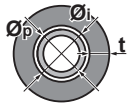

If the temperature is higher than 30°C and the humidity is higher than RH 80%, the thickness of the insulation materials should be at least 20 mm to prevent condensation on the surface of the insulation.

5.2 Connecting the refrigerant piping

DANGER: RISK OF BURNING/SCALDING

5.2.1 About connecting the refrigerant piping

Before connecting the refrigerant piping

Make sure the outdoor and indoor unit are mounted.

Typical workflow

Connecting the refrigerant piping involves:

- Connecting the refrigerant piping to the indoor unit
- Connecting the refrigerant piping to the outdoor unit
- Insulating the refrigerant piping
- Keeping in mind the guidelines for:
  - Pipe bending
  - Flaring pipe ends
  - Using the stop valves

5.2.2 Precautions when connecting the refrigerant piping

DANGER: RISK OF BURNING/SCALDING

NOTICE

- Use the flare nut fixed to the main unit.
- To prevent gas leakage, apply refrigeration oil only to the inside of the flare. Use refrigeration oil for R32 (**Example:** FW68DA, SUNISO Oil).
- Do NOT reuse joints.

WARNING

Connect the refrigerant piping securely before running the compressor. If the refrigerant piping is NOT connected and the stop valve is open when the compressor is run, air will be sucked in. This will cause abnormal pressure in the refrigeration cycle, which may result in equipment damage and even injury.

5.2.3 To connect the refrigerant piping to the outdoor unit

- **Piping length.** Keep field piping as short as possible.
- **Piping protection.** Protect the field piping against physical damage.

1 Connect the liquid refrigerant connection from the indoor unit to the liquid stop valve of the outdoor unit.

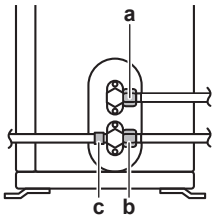

a Liquid stop valve
b Gas stop valve
c Service port

2 Connect the gas refrigerant connection from the indoor unit to the gas stop valve of the outdoor unit.

NOTICE

It is recommended that the refrigerant piping between indoor and outdoor unit is installed in a ducting or the refrigerant piping is wrapped with finishing tape.

5.3 Checking the refrigerant piping

5.3.1 To check for leaks

NOTICE

Do NOT exceed the unit's maximum working pressure (see "PS High" on the unit name plate).

NOTICE

ALWAYS use a recommended bubble test solution from your wholesaler.

NEVER use soap water:

- Soap water may cause cracking of components, such as flare nuts or stop valve caps.
- Soap water may contain salt, which absorbs moisture that will freeze when the piping gets cold.
- Soap water contains ammonia which may lead to corrosion of flared joints (between the brass flare nut and the copper flare).

1 Charge the system with nitrogen gas up to a gauge pressure of at least 200 kPa (2 bar). It is recommended to pressurize to 3000 kPa (30 bar) or higher (depending on local legislation) to detect small leaks.

2 Check for leaks by applying the bubble test solution to all connections.

3 Discharge all nitrogen gas.

5.3.2 To perform vacuum drying

1 Vacuum the system until the pressure reaches on the manifold indicates -0.1 MPa (-1 bar)

2 Leave as is for 4-5 minutes and check the pressure:

If the pressure…	Then…
Does not change	There is no moisture in the system. This procedure is finished.
Increases	There is moisture in the system. Go to the next step.

3 Vacuum the system for at least two hours to a manifold pressure pf -0.1 MPa (-1 bar).

4 After turning the pump OFF, check the pressure for at least one hour.

5 If you do NOT reach the target vacuum or CANNOT maintain the vacuum for one hour, do the following:

- Check for leaks again.
- Perform vacuum drying again.

NOTICE

Make sure to open the stop valves after installing the refrigerant piping and performing vacuum drying. Running the system with the stop valves closed may break the compressor.

6 Charging refrigerant

6.1 About charging refrigerant

The outdoor unit is factory charged with refrigerant, but in some cases the following might be necessary:

What	When
Charging additional refrigerant	When the total liquid piping length is more than specified (see later).
Completely recharging refrigerant	**Example:** ▪ When relocating the system. ▪ After a leak.

Charging additional refrigerant

Before charging additional refrigerant, make sure the outdoor unit's **external** refrigerant piping is checked (leak test, vacuum drying).

INFORMATION

Depending on the units and/or the installation conditions, it might be necessary to connect electrical wiring before you can charge refrigerant.

Typical workflow – Charging additional refrigerant typically consists of the following stages:

1 Determining if and how much you have to charge additionally.

2 If necessary, charging additional refrigerant.

3 Filling in the fluorinated greenhouse gases label, and fixing it to the inside of the outdoor unit.

Completely recharging refrigerant

Before completely recharging refrigerant, make sure the following is done:

1 All refrigerant is recovered from the system.
2 The outdoor unit's **external** refrigerant piping is checked (leak test, vacuum drying).
3 Vacuum drying on the outdoor unit's **internal** refrigerant piping is performed.

NOTICE

Before completely recharging, perform vacuum drying on the outdoor unit's **internal** refrigerant piping as well.

Typical workflow – Completely recharging refrigerant typically consists of the following stages:

1 Determining how much refrigerant to charge.
2 Charging refrigerant.
3 Filling in the fluorinated greenhouse gases label, and fixing it to the inside of the outdoor unit.

6.2 About the refrigerant

This product contains fluorinated greenhouse gases. Do NOT vent gases into the atmosphere.

Refrigerant type: R32

Global warming potential (GWP) value: 675

Periodical inspections for refrigerant leaks may be required depending on the applicable legislation. Contact your installer for more information.

A2L **WARNING: MILDLY FLAMMABLE MATERIAL**

The refrigerant inside this unit is mildly flammable.

WARNING

- The refrigerant inside the unit is mildly flammable, but normally does NOT leak. If the refrigerant leaks in the room and comes in contact with fire from a burner, a heater, or a cooker, this may result in fire, or the formation of a harmful gas.
- Turn OFF any combustible heating devices, ventilate the room, and contact the dealer where you purchased the unit.
- Do NOT use the unit until a service person confirms that the part from which the refrigerant leaked has been repaired.

WARNING

The appliance shall be stored so as to prevent mechanical damage and in a well-ventilated room without continuously operating ignition sources (e.g. open flames, an operating gas appliance, or an operating electric heater). The room size shall be as specified in the General safety precaution.

WARNING

- Do NOT pierce or burn refrigerant cycle parts.
- Do NOT use cleaning materials or means to accelerate the defrosting process other than those recommended by the manufacturer.
- Be aware that the refrigerant inside the system is odourless.

NOTICE

Applicable legislation on **fluorinated greenhouse gases** requires that the refrigerant charge of the unit is indicated both in weight and CO_2 equivalent.

Formula to calculate the quantity in CO_2 equivalent tonnes: GWP value of the refrigerant × total refrigerant charge [in kg]/1000

Contact your installer for more information.

6.3 To determine the additional refrigerant amount

If the total liquid piping length is…	Then…
≤10 m	Do NOT add additional refrigerant.
>10 m	R=(total length (m) of liquid piping–10 m)×0.020 R=Additional charge (kg) (rounded in units of 0.01 kg)

INFORMATION

Piping length is the one-way length of liquid piping.

6.4 To determine the complete recharge amount

INFORMATION

If a complete recharge is necessary, the total refrigerant charge is: the factory refrigerant charge (see unit name plate) + the determined additional amount.

6.5 To charge additional refrigerant

WARNING

- Only use R32 as refrigerant. Other substances may cause explosions and accidents.
- R32 contains fluorinated greenhouse gases. Its global warming potential (GWP) value is 675. Do NOT vent these gases into the atmosphere.
- When charging refrigerant, ALWAYS use protective gloves and safety glasses.

Prerequisite: Before charging refrigerant, make sure the refrigerant piping is connected and checked (leak test and vacuum drying).

1 Connect the refrigerant cylinder to the service port.
2 Charge the additional refrigerant amount.
3 Open the gas stop valve.

6.6 To fix the fluorinated greenhouse gases label

1 Fill in the label as follows:

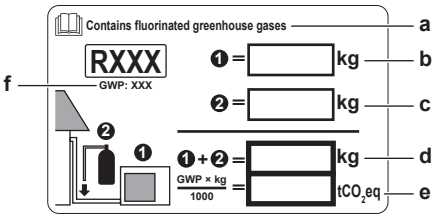

a If a multilingual fluorinated greenhouse gases label is delivered with the unit (see accessories), peel off the applicable language and stick it on top of **a**.
b Factory refrigerant charge: see unit name plate
c Additional refrigerant amount charged

d Total refrigerant charge
e **Quantity of fluorinated greenhouse gases** of the total refrigerant charge expressed as tonnes CO_2 equivalent.
f GWP = Global Warming Potential

NOTICE

Applicable legislation on **fluorinated greenhouse gases** requires that the refrigerant charge of the unit is indicated both in weight and CO_2 equivalent.

Formula to calculate the quantity in CO_2 equivalent tonnes: GWP value of the refrigerant × total refrigerant charge [in kg] / 1000

Use the GWP value mentioned on the refrigerant charge label.

2 Fix the label on the inside of the outdoor unit near the gas and liquid stop valves.

7 Electrical installation

DANGER: RISK OF ELECTROCUTION

WARNING

- All wiring MUST be performed by an authorised electrician and MUST comply with the national wiring regulation.
- Make electrical connections to the fixed wiring.
- All components procured on-site and all electrical construction MUST comply with the applicable legislation.

WARNING

ALWAYS use multicore cable for power supply cables.

WARNING

If the supply cord is damaged, it MUST be replaced by the manufacturer, its service agent or similarly qualified persons in order to avoid a hazard.

WARNING

Provide adequate measures to prevent that the unit can be used as a shelter by small animals. Small animals that make contact with electrical parts can cause malfunctions, smoke or fire.

WARNING

Do NOT connect the power supply to the indoor unit. This could result in electrical shock or fire.

WARNING

- Do NOT use locally purchased electrical parts inside the product.
- Do NOT branch the power supply for the drain pump, etc. from the terminal block. This could result in electrical shock or fire.

WARNING

Keep the interconnection wiring away from copper pipes without thermal insulation as such pipes will be very hot.

7.1 Specifications of standard wiring components

NOTICE

We recommend using solid wires. If stranded wires are used, slightly twist the strands to consolidate the end of the conductor for either direct use in the terminal clamp or insertion in a round crimp-style terminal. Details are described in "Guidelines when connecting the electrical wiring" in the installer reference guide.

Component		
Power supply cable	Voltage	220~240 V
	Phase	1~
	Frequency	50 Hz
	Wire sizes	MUST comply with applicable legislation
Interconnection cable (indoor↔outdoor)		4-core cable ≥1.5 mm² and applicable for 220~240 V
Recommended field fuse		16 A
Earth leakage circuit breaker		MUST comply with applicable legislation

7.2 To connect the electrical wiring to the outdoor unit

WARNING

Do NOT extend the power supply or the interconnection cable by using wire connectors, wire connection clamps, taped wires, extension cords.

These can cause overheating, electric shock or fire.

1 Remove the service cover.
2 Remove the shield plate.
3 Open the wire clamp.
4 Connect the interconnection cable and power supply as follows:

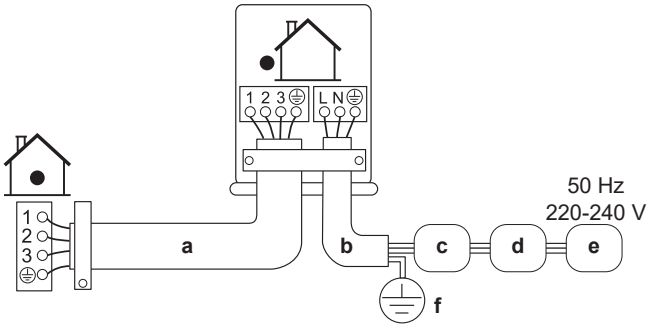

a Interconnection cable
b Power supply cable
c Circuit breaker (field provided fuse with rating according to the model name plate)
d Residual current device
e Power supply
f Earth

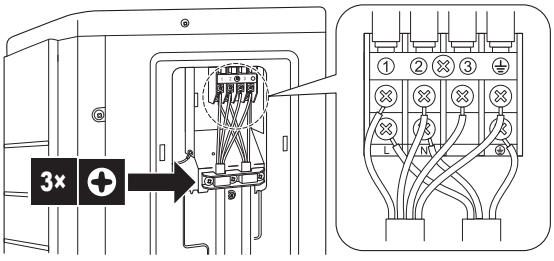

5 Tighten the terminal screws securely. We recommend using a Phillips screwdriver.

8 Finishing the outdoor unit installation

8.1 To finish the outdoor unit installation

1 Insulate and fix the refrigerant piping and cables as follows:

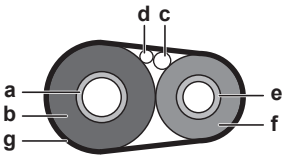

a Gas pipe
b Gas pipe insulation
c Interconnection cable
d Field wiring (if applicable)
e Liquid pipe
f Liquid pipe insulation
g Finishing tape

2 Install the service cover.

8.2 To close the outdoor unit

NOTICE

When closing the outdoor unit cover, make sure that the tightening torque does NOT exceed 1.3 N•m.

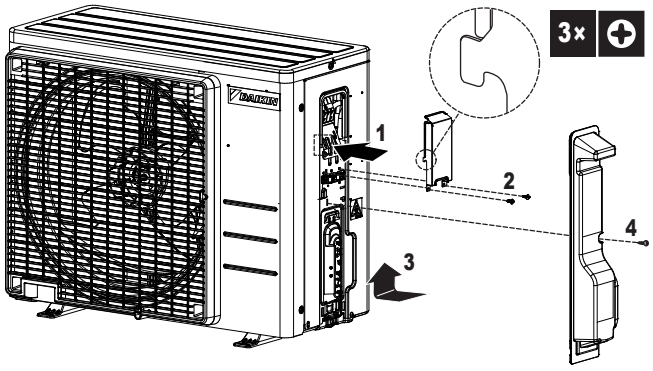

9 Maintenance and service

NOTICE

Maintenance MUST be done by an authorised installer or service agent.

We recommend performing maintenance at least once a year. However, applicable legislation might require shorter maintenance intervals.

10 Commissioning

NOTICE

ALWAYS operate the unit with thermistors and/or pressure sensors/switches. If NOT, burning of the compressor might be the result.

10.1 Checklist before commissioning

1 After the installation of the unit, check the items listed below.

2 Close the unit.

3 Power up the unit.

☐	The **indoor unit** is properly mounted.
☐	The **outdoor unit** is properly mounted.
☐	The system is properly **earthed** and the earth terminals are tightened.
☐	The **power supply voltage** matches the voltage on the identification label of the unit.
☐	There are NO **loose connections** or damaged electrical components in the switch box.
☐	There are NO **damaged components** or **squeezed pipes** on the inside of the indoor and outdoor units.
☐	There are NO **refrigerant leaks**.
☐	The **refrigerant pipes** (gas and liquid) are thermally insulated.
☐	The correct pipe size is installed and the **pipes** are properly insulated.
☐	The **stop valves** (gas and liquid) on the outdoor unit are fully open.
☐	The following **field wiring** has been carried out according to this document and the applicable legislation between the outdoor unit and the indoor unit.
☐	**Drainage** Make sure drainage flows smoothly. **Possible consequence:** Condensate water might drip.
☐	The indoor unit receives the signals of the **user interface**.
☐	The specified wires are used for the **interconnection cable**.
☐	The **fuses, circuit breakers,** or locally installed protection devices are installed according to this document, and have NOT been bypassed.

10.2 Checklist during commissioning

☐	To perform an **air purge**.
☐	To perform a **test run**.

10.3 To perform a test run

Prerequisite: The power supply MUST be in the specified range.

Prerequisite: Test run may be performed in cooling or heating mode.

Prerequisite: Refer to the operation manual of the indoor unit for setting temperature, operation mode….

1 In cooling mode, select the lowest programmable temperature. In heating mode, select the highest programmable temperature. The test run can be disabled if necessary.

2 When the test run is finished, set the temperature to a normal level. In cooling mode: 26~28°C, in heating mode: 20~24°C.

3 Make sure that all functions and parts are working properly.

4 The system stops operating 3 minutes after the unit is turned OFF.

INFORMATION

- Even if the unit is turned OFF, it consumes electricity.
- When the power turns back on after a power break, the previously selected mode will be resumed.

10.4 Starting up the outdoor unit

See the indoor unit installation manual for configuration and commissioning of the system.

11 Troubleshooting

11.1 Fault diagnosis using LED on outdoor unit PCB

LED is…		Diagnosis
◑	flashing	Normal → check the indoor unit.
☼	ON	Turn the power OFF and back ON, and check the LED within approximately 3 minutes. → If the LED is ON again, the outdoor unit PCB is faulty.
●	OFF	1 Supply voltage (for power saving). 2 Power supply fault. 3 Turn the power OFF and back ON, and check the LED within approximately 3 minutes. → If the LED is OFF again, the outdoor unit PCB is faulty.

NOTICE

For error code diagnosis use the wireless remote control delivered with the indoor unit. See the service manual for the complete list of error codes and a detailed troubleshooting guideline for each error.

DANGER: RISK OF ELECTROCUTION

- When the unit is NOT operating, the LEDs on the PCB are turned OFF in order to save power.
- Even when the LEDs are OFF, the terminal block and the PCB may be powered.

12 Disposal

NOTICE

Do NOT try to dismantle the system yourself: dismantling of the system, treatment of the refrigerant, oil and other parts MUST comply with applicable legislation. Units MUST be treated at a specialised treatment facility for reuse, recycling and recovery.

INFORMATION

To protect the environment, make sure to perform an automatic pump down operation when relocating or dismantling the unit. For the pump down procedure, refer to the service manual or the installer reference guide.

13 Technical data

- A **subset** of the latest technical data is available on the regional Daikin website (publicly accessible).
- The **full set** of the latest technical data is available on the Daikin Business Portal (authentication required).

13.1 Wiring diagram

13.1.1 Unified wiring diagram legend

For applied parts and numbering, refer to the wiring diagram on the unit. Part numbering is by Arabic numbers in ascending order for each part and is represented in the overview below by "*" in the part code.

Symbol	Meaning	Symbol	Meaning
	Circuit breaker		Protective earth
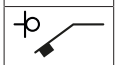			Noiseless earth
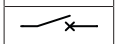			Protective earth (screw)
	Connection		Rectifier
	Connector		Relay connector
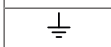	Earth		Short-circuit connector
	Field wiring		Terminal
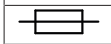	Fuse		Terminal strip
	Indoor unit		Wire clamp
	Outdoor unit		Heater
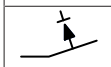	Residual current device		

Symbol	Colour	Symbol	Colour
BLK	Black	ORG	Orange
BLU	Blue	PNK	Pink
BRN	Brown	PRP, PPL	Purple
GRN	Green	RED	Red
GRY	Grey	WHT	White
SKY BLU	Sky blue	YLW	Yellow

Symbol	Meaning
A*P	Printed circuit board
BS*	Pushbutton ON/OFF, operation switch
BZ, H*O	Buzzer
C*	Capacitor
AC*, CN*, E*, HA*, HE*, HL*, HN*, HR*, MR*_A, MR*_B, S*, U, V, W, X*A, K*R_*, NE	Connection, connector
D*, V*D	Diode
DB*	Diode bridge
DS*	DIP switch
E*H	Heater
FU*, F*U, (for characteristics, refer to PCB inside your unit)	Fuse
FG*	Connector (frame ground)
H*	Harness
H*P, LED*, V*L	Pilot lamp, light emitting diode

Symbol	Meaning
HAP	Light emitting diode (service monitor green)
HIGH VOLTAGE	High voltage
IES	Intelligent eye sensor
IPM*	Intelligent power module
K*R, KCR, KFR, KHuR, K*M	Magnetic relay
L	Live
L*	Coil
L*R	Reactor
M*	Stepper motor
M*C	Compressor motor
M*F	Fan motor
M*P	Drain pump motor
M*S	Swing motor
MR*, MRCW*, MRM*, MRN*	Magnetic relay
N	Neutral
NE	Noiseless earth
n=*, N=*	Number of passes through ferrite core
PAM	Pulse-amplitude modulation
PCB*	Printed circuit board
PM*	Power module
PS	Switching power supply
PTC*	PTC thermistor
Q*	Insulated gate bipolar transistor (IGBT)
Q*C	Circuit breaker
Q*DI, KLM	Earth leak circuit breaker
Q*L	Overload protector
Q*M	Thermo switch
Q*R	Residual current device
R*	Resistor
R*T	Thermistor
RC	Receiver
S*C	Limit switch
S*L	Float switch
S*NG	Refrigerant leak detector
S*NPH	Pressure sensor (high)
S*NPL	Pressure sensor (low)
S*PH, HPS*	Pressure switch (high)
S*PL	Pressure switch (low)
S*T	Thermostat
S*RH	Humidity sensor
S*W, SW*	Operation switch
SA*, F1S	Surge arrester
SR*, WLU	Signal receiver
SS*	Selector switch
SHEET METAL	Terminal strip fixed plate
T*R	Transformer
TC, TRC	Transmitter
V*, R*V	Varistor
V*R	Diode bridge, Insulated-gate bipolar transistor (IGBT) power module
WRC	Wireless remote controller

13 Technical data

Symbol	Meaning
X*	Terminal
X*M	Terminal strip (block)
Y*E	Electronic expansion valve coil
Y*R, Y*S	Reversing solenoid valve coil
Z*C	Ferrite core
ZF, Z*F	Noise filter

13.2 Piping diagram

13.2.1 Piping diagram: Outdoor unit

ARXF20J, ARXF25J, ARXF35J

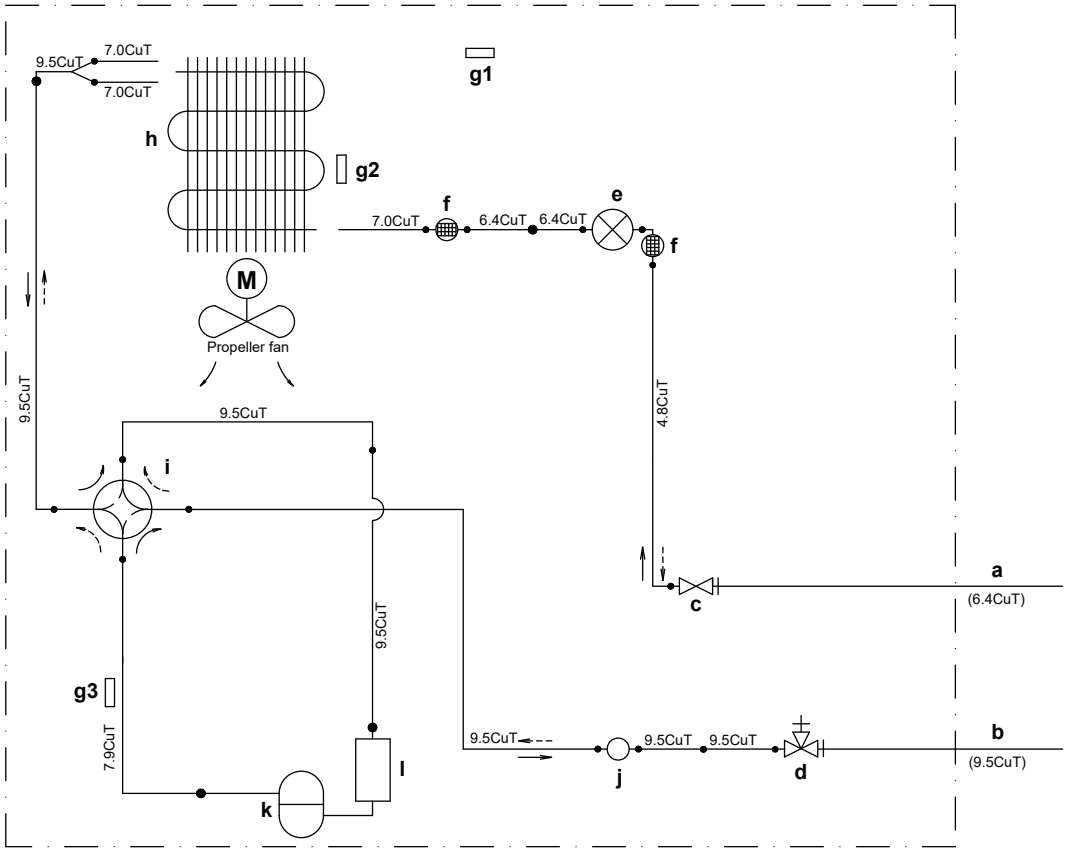

ARXF42J

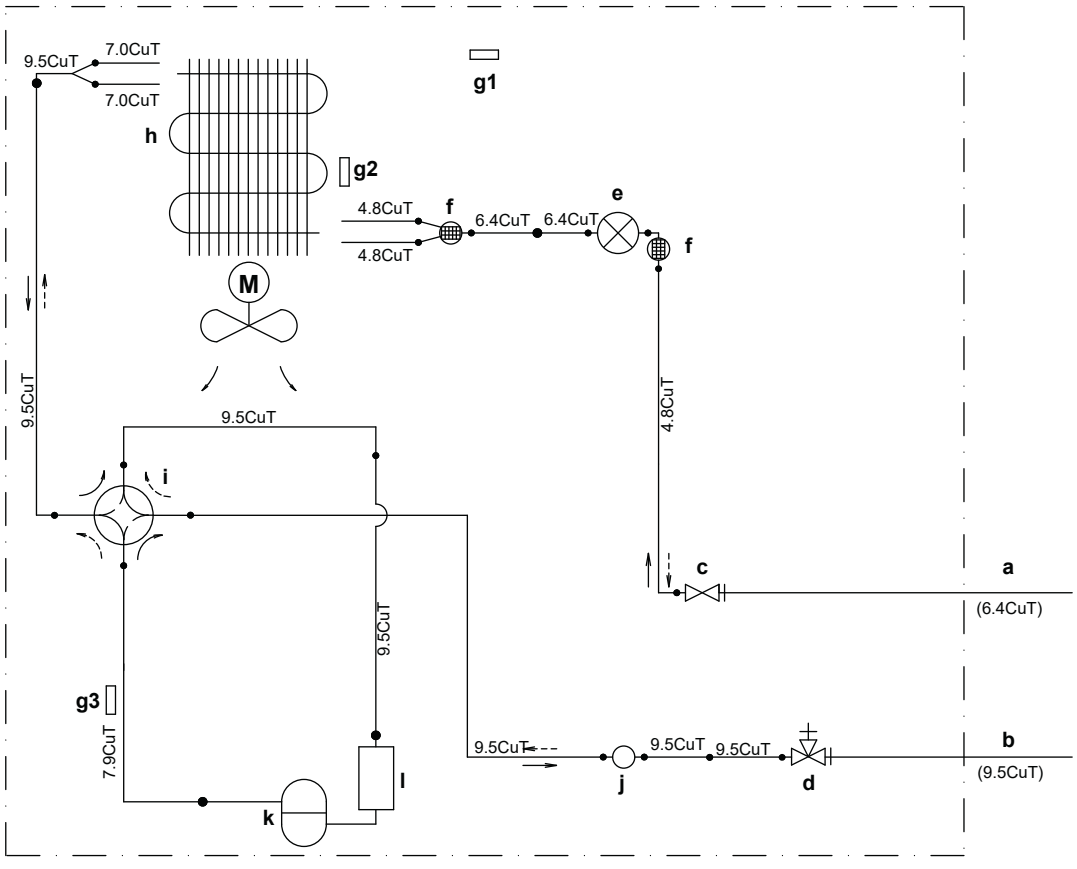

DAIKIN ISITMA VE SOĞUTMA SİSTEMLERİ SAN. TİC. A.Ş.
Gülsuyu Mahallesi, Fevzi Çakmak Caddesi, Burçak Sokak, No:20, 34848 Maltepe
İSTANBUL / TÜRKİYE
Tel: 0216 453 27 00
Faks: 0216 671 06 00
Çağrı Merkezi: 444 999 0
Web: www.daikin.com.tr

Copyright 2026 Daikin

DAIKIN EUROPE N.V.
Zandvoordestraat 300, B-8400 Oostende, Belgium

3P748643-25T 2026.06